CE EMC TEST REPORT

Report No.: DDT-R21020802-1E1

Applicant	:	TPV Electronics (Fujian) Co., Ltd.
Address	:	Rongqiao Economic and Technological Development Zone, Fuqing City, Fujian Province
Equipment under Test	:	LCD Monitor
Model No.	:	**32V4********("*" = 0-9, A-Z, a-z, +, -, / or blank. All models difference are in sale marketing)
Trade Mark	:	AOC

Issued By: Tianjin Dongdian Testing Service Co., Ltd.

Address: No.19, Weisi Road, MIP, Develop Area, Tianjin, China, 300385

Tel: +86-22-58038033, E-mail: ddt@dgddt.com, http://www.dgddt.com

REPORT

Table of Contents

Test Report Declare

Applicant	:	TPV Electronics (Fujian) Co.,Ltd.
Address	:	Rongqiao Economic and Technological Development Zone,Fuqing City,Fujian Province
Equipment Under Test	:	LCD Monitor
Model No.	:	**32V4********("*" = 0-9，A-Z，a-z，+，-，/ or blank. All models difference are in sale marketing)
Trade Mark	:	AOC

Test Standard Used:

EN55032:2012+AC:2013(Class B), EN55032:2015, EN55032:2015+AC:2016, CISPR32:2012
CISPR32:2015+COR1:2016, AS/NZS CISPR 32:2015, EN 61000-3-2:2014, EN 61000-3-3:2013
EN55035:2017

Test Procedure Used:

IEC-61000-4-2:2008, IEC 61000-4-3:2006+A1:2007+A2:2010, IEC-61000-4-4:2012, IEC-61000-4-5:2014
IEC-61000-4-6:2013, IEC-61000-4-8:2009, IEC-61000-4-11:2004, IEC-61000-4-11:2004+A1:2017

We Declare:

The equipment described above is tested and assessed by Tianjin Dongdian Testing Service Co., Ltd. and in the configuration assessed the equipment complied with the standards specified above. The tested and assessed results are contained in this test report and Tianjin Dongdian Testing Service Co., Ltd. is assumed of full responsibility for the accuracy and completeness of these assessments.

After test and evaluation, our opinion is that the equipment in accordance with above standards.

Report No.:	DDT-R21020802-1E1		
Date of Receipt:	Feb. 06, 2021	**Date of Test:**	Feb. 06, 2021 ~ Feb. 26, 2021

天津电子检验检测技术服务有限公司 TIANJIN DONGDIAN TESTING SERVICE CO.,LTD. 检验检测专用章 Inspection & Testing Services

Prepared By: ***Approved By:***

Ethan Bao Aaron Zhang

Ethan Bao/Engineer ***Aaron Zhang/EMC Manager***

Note: This report applies to above tested sample only. This report shall not be reproduced in parts without written approval of Tianjin Dongdian Testing Service Co., Ltd.

Revision History

Rev.	Revisions	Issue Date	Revised By
---	Initial issue	Feb. 26, 2021	

1. Summary of Test Results

Emission		
Description of Test Item	**Standard**	**Result**
Conducted emission at AC mains terminals	EN55032:2012+AC:2013 EN55032:2015 EN55032:2015+AC:2016	PASS
Conducted emission at telecommunication port	EN55032:2012+AC:2013 EN55032:2015 EN55032:2015+AC:2016	N/A
Radiated emission	EN55032:2012+AC:2013 EN55032:2015 EN55032:2015+AC:2016	PASS
Harmonic current	EN 61000-3-2:2014	N/A
Voltage fluctuation & Flicker	EN 61000-3-3:2013	PASS

Immunity				
Description of Test Item	**Standard**	**Result**	**Performance Criteria**	
			Required	**Observation**
Electrostatic discharge (ESD)	IEC-61000-4-2:2008	Pass	B	A
Radiated, radio-frequency, electromagnetic field	IEC 61000-4-3:2006+A1:2007+A2:2010	Pass	A	A
Electrical fast transients (EFT)	IEC-61000-4-4:2012	Pass	B	A
Surges	IEC-61000-4-5:2014	Pass	B	A
Continuous conducted disturbances	IEC-61000-4-6:2013	Pass	A	A
Power frequency magnetic field	IEC-61000-4-8:2009	Pass	A	A
Voltage dips, < 5%	IEC-61000-4-11:2004 IEC-61000-4-11:2004+A1:2017	Pass	B	A
Voltage dips, 70%		Pass	C	A
Voltage interruptions		Pass	C	B
Note: N/A is an abbreviation for Not Applicable.				

2. General Test Information

2.1. Description of EUT

EUT* Name	:	LCD Monitor
Model Number	:	Q32V4
Serial Number	:	-
EUT function description	:	Please refer to user manual of this device
Power supply	:	100-240V 50/60Hz
EUT Class	:	Class B
Maximum work frequency	:	296 MHz
Dimensions (W x L x H)	:	730 x 200 x 530 mm

Note: EUT is the abbreviation of equipment under test.

2.2. Primary Function of EUT

Function	Description
☒Broadcast reception function	N/A
☒Print	N/A
☒Scan	N/A
☑Display or display output	Display
☒Musical tone generating	N/A
☒Networking	N/A
☑Audio output	Audio output
☒Telephony	N/A
☒Bluetooth	N/A
☒Other:	N/A
Note: "☒" means the product does not have this function, "☑" means the product has this function, N/A means not applicable	

2.3. Port of EUT

Port	Description
☑AC mains power port	AC power port
☒DC network power port	N/A
☒Wired network port	N/A
☑Signal data/control port	One HDMI port, One DP port
☒Antenna port	N/A
☒Broadcast receiver tuner port	N/A
☑Audio output port	One audio out port
☒Video output port	N/A
☒Other:	N/A
Note: "☒" means the product does not have this port, "☑" means the product has this port, N/A means not applicable	

2.4. Accessories of EUT

Description of Accessories	Manufacturer	Model number	Description	Remark
AC Cable	N/A	N/A	Length: 1.5m/1.8m, Unshielded	N/A
HDMI Cable	N/A	N/A	Length: 1.5m/1.8m, Shielded	N/A
DP Cable	N/A	N/A	Length: 1.5m/1.8m, Shielded	N/A
AUDIO Cable	N/A	N/A	Length: 1.5m/1.8m, Shielded	N/A

2.5. Test peripherals

Device	Manufacturer	Model No.	Serial No.	Remark
Desktop PC	HP	TPC-W058-MT	8CG0321Q58	N/A
Desktop PC	Samsung	DM700T6A-A99	JVTG98EJ2C004QX	N/A
Desktop PC	Samsung	DM700T6A-A99	JVTG98EJ2C0087L	N/A
Keyboard	DELL	N/A	N/A	N/A
Mouse	DELL	N/A	N/A	N/A
DVD	PHILIPS	TAEP200/93	HCPE2025000750	N/A
Speaker	JBL	GO2+	N/A	N/A
Headphone	N/A	N/A	N/A	N/A

2.6. Block diagram EUT configuration for test

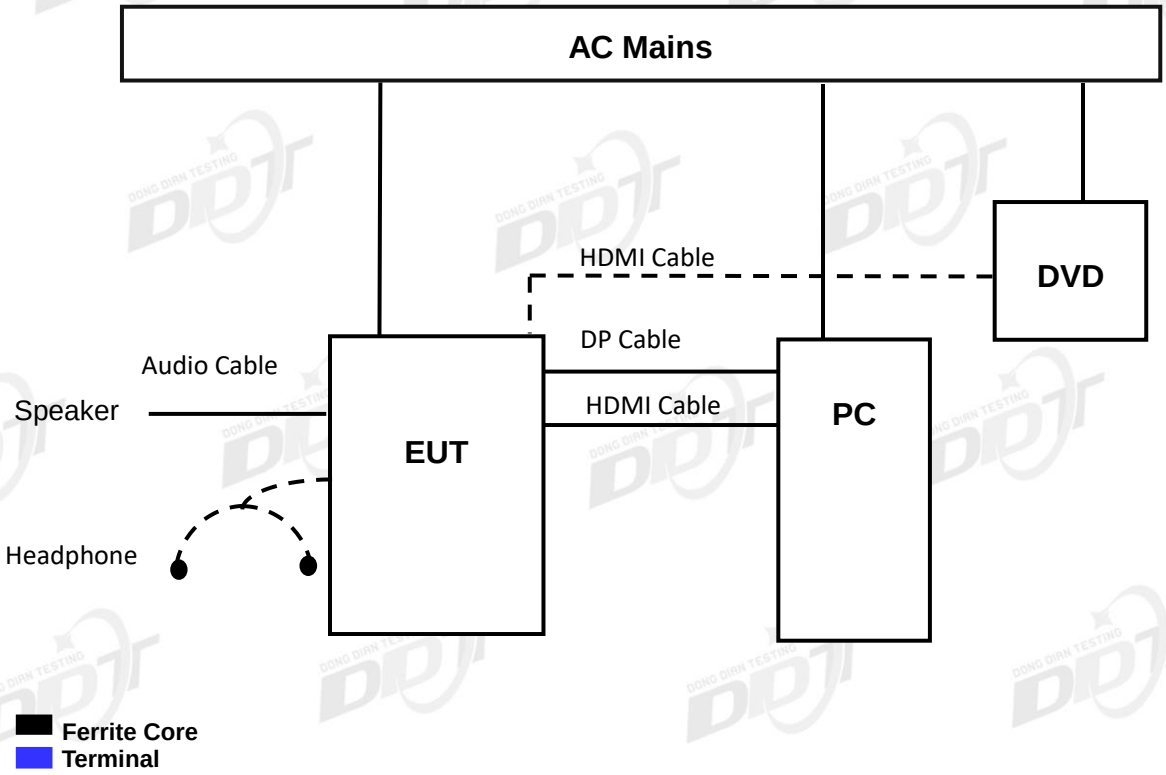

2.7. EUT operating mode(s)

Mode1: HDMI	Connect HDMI cable from PC's HDMI port to EUT's HDMI Port. The test signal is color bars with moving picture element according to ITU-R BT 471-1.
Mode2: DP	Connect DP cable from PC's DP port to EUT's DP Port. The test signal is color bars with moving picture element according to ITU-R BT 471-1.

2.8. Performance Criteria

During and/or after immunity testing for EN55035:2017, the EUT was monitored to the following performance criterion.

Criterion	Operating mode(s)	Description
A	**1,2**	No noticeable degradation or loss of function is allowed during the test. The EUT shall continue to operate as intended without operator intervention. The product conforms with the requirements of clause 8 of EN55035:2017. The product conforms with the requirements of Annex of EN55035:2017. ☐ Annex A ☐ Annex B ☐ Annex C ☒ Annex D ☐ Annex E ☐ Annex F ☒ Annex G
B	**1,2**	No noticeable degradation or loss of function is allowed after the test. The EUT shall continue to operate as intended without operator intervention. During the test, degradation of performance is allowed.. No change of operating state or stored data is allowed to persist after the test. The product conforms with the requirements of clause 8 of EN55035:2017. The product conforms with the requirements of Annex of EN55035:2017. ☐ Annex A ☐ Annex B ☐ Annex C ☒ Annex D ☐ Annex E ☐ Annex F ☒ Annex G
C	**1,2**	Loss of function is allowed, provided that the function is self recoverable or can be restored by the operation of the controls by the user. The product conforms with the requirements of clause 8 of EN55035:2017. The product conforms with the requirements of Annex of EN55035:2017. ☐ Annex A ☐ Annex B ☐ Annex C ☒ Annex D ☐ Annex E ☐ Annex F ☒ Annex G

2.9. Deviations of test standard

[Standard deviation 1] Surge immunity test was done according to IEC 61000-4-5:2014 instead of IEC 61000-4-5:2005.
[Standard deviation 2] Radio-frequency conducted immunity test was done according to IEC 61000-4-6:2013 instead of IEC 61000-4-6:2008.

2.10. Test laboratory

Tianjin Dongdian Testing Service Co., Ltd.

Address: No.19, Weisi Road, MIP, Develop Area, Tianjin, China, 300385

Tel: +86-22-58038033, http://www.dgddt.com, Email: ddt@dgddt.com

NVLAP (National Voluntary Laboratory Accreditation Program) CODE: 500036-0

CNAS（China National Accreditation Service for Conformity Assessment）CODE: L13402

FCC Designation Number: CN5004; FCC Test Firm Registration Number: 368676

2.11. Measurement uncertainty

Test Item		Uncertainty
Conducted emission	Main terminal	3.4dB (150KHz-30MHz)
	Telecommunication (ISN T800)	4.59dB
	Telecommunication (ISN ST08)	3.5dB
Uncertainty for 10m Radiation Emission test (30MHz-1GHz)		5.2 dB (Antenna Polarize: H)
		5.2 dB (Antenna Polarize: V)
Uncertainty for Radiation disturbance test (1GHz to 6GHz)		5.0dB
Harmonics current		3.1 %
Voltage fluctuation & Flicker		1.7 %
Note: This uncertainty represents an expanded uncertainty expressed at approximately the 95% confidence level using a coverage factor of k=2. We have conducted the Electrostatic discharge, Electrical fast transient/burst, Surge, Voltage dips, short interruptions and voltage variations tests to check the uncertainty. Radiated, radio-frequency, electromagnetic field 5.4dB. Conducted disturbances, induced by radio-frequency fields 1.1dB.		

3. Conducted Emission (mains power port)

3.1. General information

Test date	Feb. 22, 2021	**Test engineer**	Sam	
Climate condition	**Ambient temperature**	22.9±2℃	**Relative humidity**	25±1%
	Atmospheric pressure	102.5±0.2 kPa		
Test place	Shield Room 2#			

3.2. Test Equipment

Equipment	Manufacturer	Model No.	Serial No.	Last Cal.	Cal. Interval
Test Receiver	R&S	ESCI	101032	Mar. 02, 2020	1 Year
LISN 1	R&S	ENV216	101122	Mar. 02, 2020	1 Year
LISN 2	R&S	ENV216	101059	Mar. 02, 2020	1 Year
Test software	TOYO	EP5/CE	V 5.4.40	N/A	N/A

3.3. Reference standard

EN55032:2012+AC:2013(Class B)
EN55032:2015
EN55032:2015+AC:2016

3.4. Block diagram of test setup

For table-top equipment

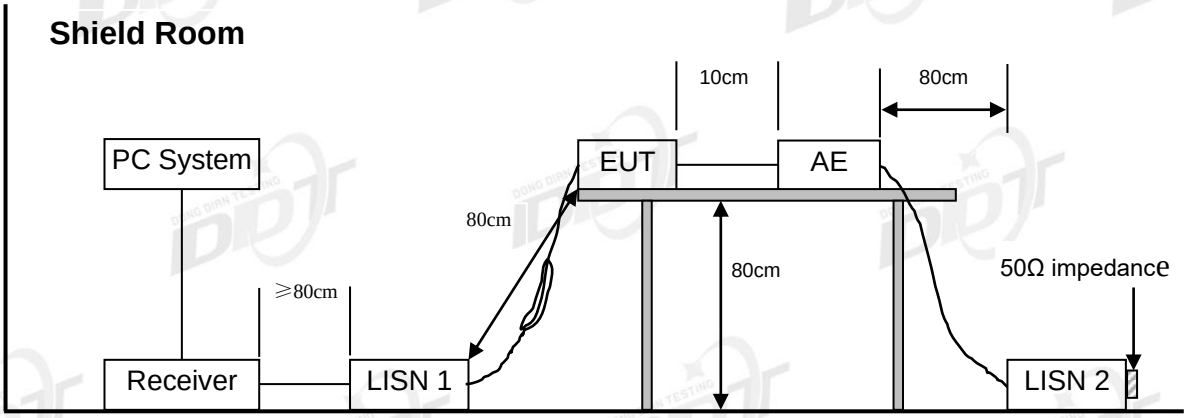

For floor standing equipment

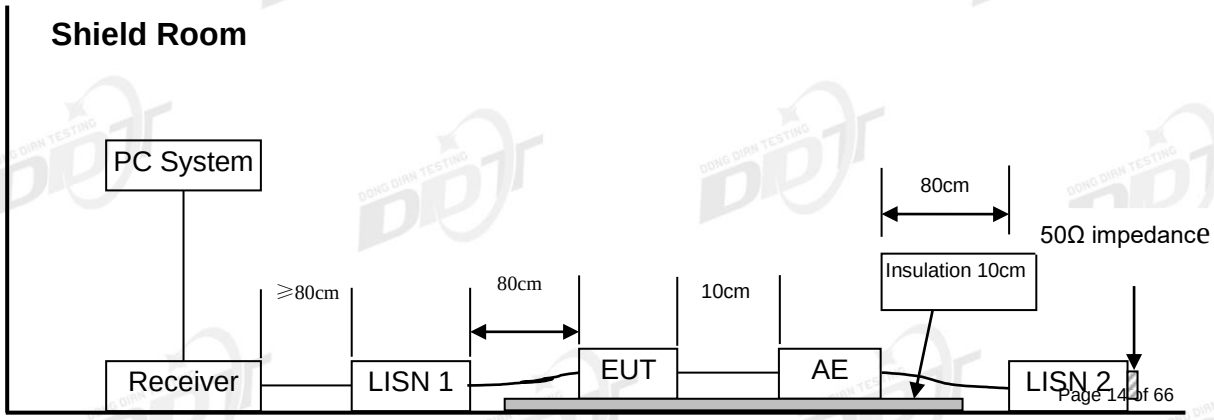

For combinations equipment

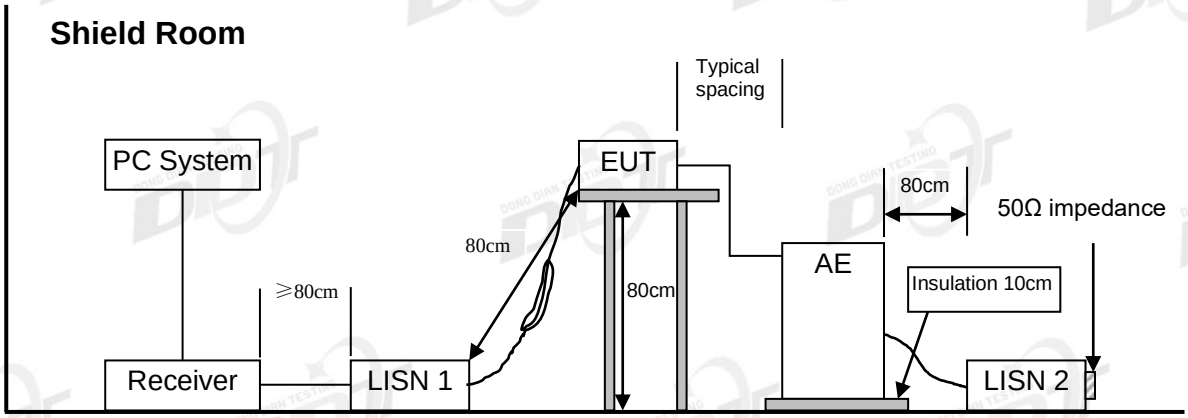

3.5. Limits

Class A

Frequency			Quasi-Peak Level dB(μV)	Average Level dB(μV)
150kHz	~	500kHz	79	66
500kHz	~	30MHz	73	60

Class B

Frequency			Quasi-Peak Level dB(μV)	Average Level dB(μV)
150kHz	~	500kHz	66 ~ 56*	56 ~ 46*
500kHz	~	5MHz	56	46
5MHz	~	30MHz	60	50

Notes: 1. * Decreasing linearly with logarithm of frequency.

2. The lower limit shall apply at the transition frequencies.

3.6. Test procedure

(1) The EUT was placed on a non-metallic table, 80cm above the ground plane.

(2) The EUT's power adapter was connected to the power mains through a line impedance stabilization network (L.I.S.N). which this provided a 50-ohm coupling impedance for the EUT (Please refer to the block diagram of the test setup and photographs). Both sides of power line were checked for maximum conducted disturbance. In order to find the maximum emission, the relative positions of equipment and all of the interface cables were changed according to EN 55032 on conducted disturbance emission test.

(3) The bandwidth of test receiver is set at 9 kHz.

(4) The frequency range from 150 kHz to 30MHz is checked.

(5) Pre-scan measurements were performed in all operating mode or resolution.

But final measurements were performed in worst cases based on pre-scan measurements.

The EUT with following test modes were pre-tested:

No.	Test Voltage	Operation Mode	Cable Length	Resolution
1.	230V 50Hz	Mode 1 HDMI	1.8m	2560*1440@75Hz
2.			1.8m	2560*1440@60Hz
3.			1.8m	1920*1080@60Hz
4. *			1.8m	800*600@60Hz
5.			1.5m	800*600@60Hz
6.			1.8m	DVD
7.		Mode 2 DP	1.8m	2560*1440@75Hz
8.			1.8m	2560*1440@60Hz
9.			1.8m	1920*1080@60Hz
10.			1.8m	800*600@60Hz
11.			1.5m	Worst case from above
12.	230V 50Hz	HDMI 800*600@60Hz with 1.5m power cord		
13.	110V 60Hz	HDMI 800*600@60Hz		
* Means the worst test mode.				

3.7. Test result

Operating Mode 1: HDMI

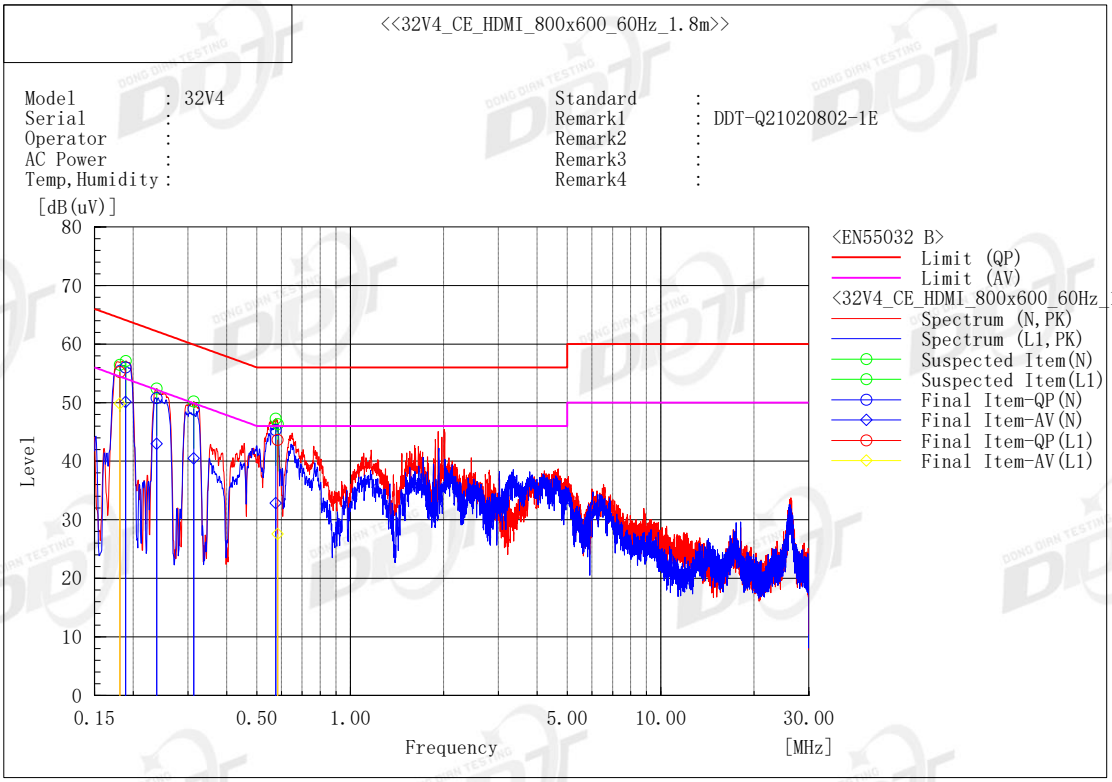

Final Result

--- N Phase ---

No.	Frequency [MHz]	Reading QP [dB(uV)]	Reading CAV [dB(uV)]	c.f [dB]	Result QP [dB(uV)]	Result CAV [dB(uV)]	Limit QP [dB(uV)]	Limit AV [dB(uV)]	Margin QP [dB]	Margin CAV [dB]
1	0.18888	46.4	40.5	9.6	56.0	50.1	64.1	54.1	8.1	4.0
2	0.57546	35.6	23.1	9.7	45.3	32.8	56.0	46.0	10.7	13.2
3	0.31323	39.2	30.8	9.7	48.9	40.5	59.9	49.9	11.0	9.4
4	0.23782	41.0	33.3	9.7	50.7	43.0	62.2	52.2	11.5	9.2

--- L1 Phase ---

No.	Frequency [MHz]	Reading QP [dB(uV)]	Reading CAV [dB(uV)]	c.f [dB]	Result QP [dB(uV)]	Result CAV [dB(uV)]	Limit QP [dB(uV)]	Limit AV [dB(uV)]	Margin QP [dB]	Margin CAV [dB]
1	0.18087	45.6	40.2	9.6	55.2	49.8	64.4	54.4	9.2	4.6
2	0.58408	34.0	18.0	9.6	43.6	27.6	56.0	46.0	12.4	18.4

Note1) Level (Quasi-Peak and/or C/Average) = Meter Reading + Factor
Note2) Line = Polarity of input power (Live or Neutral)
N : Abbreviation of Neutral Polarity, L1 : Abbreviation of Live Polarity,
Note3) Factor = LISN Insertion Loss + Cable Loss
Note4) Margin = Limit – Level (Quasi-Peak and/or C/Average)
Note5) C/Average : Abbreviation of CISPR Average

4. Conducted Emission (Telecommunication Port)

4.1. General information

Test date	N/A	**Test engineer**	N/A	
Climate condition	**Ambient temperature**	N/A	**Relative humidity**	N/A
	Atmospheric pressure	N/A		
Test place	Shield Room 2#			

4.2. Test equipment

Equipment	Manufacturer	Model No.	Serial No.	Last Cal.	Cal. Interval
Test Receiver	R&S	ESCI	101032	Mar. 02, 2020	1 Year
ISN	TESEQ	T800	30844	Feb. 27, 2020	1 Year
ISN	TESEQ	ST08	33992	Feb. 27, 2020	1 Year
Test software	TOYO	EP5/CE	V 5.4.40	N/A	N/A

4.3. Reference standard

EN55032:2012+AC:2013(Class B)
EN55032:2015
EN55032:2015+AC:2016

4.4. Block diagram of test setup

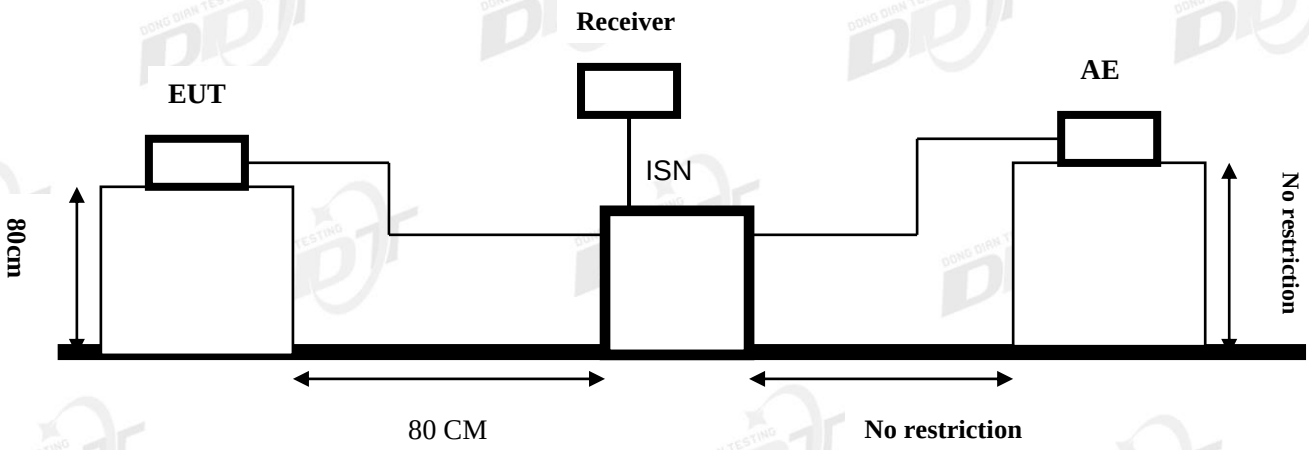

EUT means Equipment Under Test
AE means Associated Equipment.

4.5. Limits for conducted disturbance at the mains ports of class B

Frequency	Quasi-Peak Level dB(μV)	Average Level dB(μV)
150kHz ~ 500kHz	84 ~ 74*	74 ~ 64*
5MHz ~ 30MHz	74	64

Notes: 1. * Decreasing linearly with logarithm of frequency.

2. The lower limit shall apply at the transition frequencies.

4.6. Test procedure

The EUT was placed on a 0.8m high non-metallic table in shielded room.
Connect ISN directly to reference ground plane.
The measured voltage at the measurement port of the ISN should correct the reading by adding the voltage division factor of the ISN, and compare to the voltage limit.

For Local Area Network (LAN) device, in order to make reliable emission measurements representative of high LAN utilization it is only necessary to create a condition of LAN utilization in excess of 10 % and sustain that level for a minimum of 250 ms. The content of the test traffic should consist of both periodic and pseudo-random messages in order to emulate realistic types of data transmission (e.g. random: files compressed or encrypted; periodic: uncompressed graphic files, memory dumps, screen updates, disk images). If the LAN maintains transmission during idle periods measurements shall also be made during idle periods.

When disturbance voltage measurements are performed on a single unscreened balanced pair, an adequate ISN for two wires shall be used; when performed on unscreened cables containing two balanced pairs, an adequate ISN for four wires shall be used.

4.7. Test result

Not applicable: This product does not have a communication port

5. Radiated Emissions (30MHz to 1GHz)

5.1. General information

Test date	Feb. 20, 2021	**Test engineer**	Jason	
Climate condition	**Ambient temperature**	19.6±2℃	**Relative humidity**	23±1%
	Atmospheric pressure	100.4±0.2kPa		
Test place	10m Chamber			

5.2. Test equipment

Equipment	**Manufacturer**	**Model No.**	**Serial No.**	**Last Cal.**	**Cal. Interval**
EMI Test Receiver	R&S	ESCI	101024	Mar. 02, 2020	1 Year
EMI Test Receiver	R&S	ESCI	101030	Mar. 02, 2020	1 Year
Bilog Antenna	TESEQ	CBL6112D	30997	Jan, 17, 2020	2 Year
Bilog Antenna	TESEQ	CBL6112D	30999	Jan, 17, 2020	2 Year
Amplifier	Sonoma	310N	300913	Feb. 28, 2020	1 Year
Amplifier	Sonoma	310N	300914	Feb. 28, 2020	1 Year
Ant Mast	Innco	MA4000	N/A	N/A	N/A
Ant Mast	Innco	MA4000	N/A	N/A	N/A
Mast Controller	Innco	CO2000	N/A	N/A	N/A
Mast Controller	Innco	CO2000	N/A	N/A	N/A
RF Selector 4CH	TOYO	NS4904N	Selector1	N/A	N/A
RF Selector 4CH	TOYO	NS4904N	Selector2	N/A	N/A
Test software	TOYO	EP5/RE	V 5.7.10	N/A	N/A
Notes. N/A means Not applicable.					

5.3. Reference standard

EN55032:2012+AC:2013(Class B)
EN55032:2015
EN55032:2015+AC:2016

5.4. Block diagram of test setup

Below 1GHz

For table-top equipment

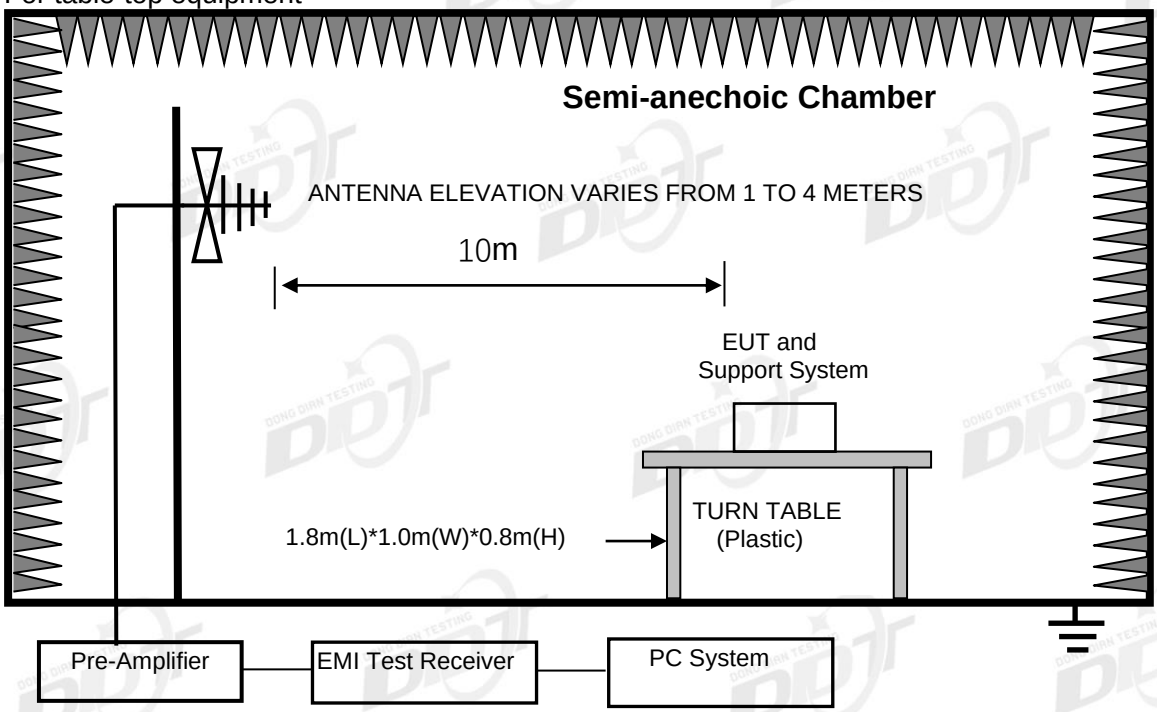

5.5. Limits

Class A

Equipment	Frequency	Field Strengths Limits at 10m measuring distance dB(μV)/m	Field Strengths Limits at 3m measuring distance dB(μV)/m
Class A Equipment	30MHz to 230MHz	40	50
	230MHz to 1000MHz	47	57

Class B

Equipment	Frequency	Field Strengths Limits at 10m measuring distance dB(μV)/m	Field Strengths Limits at 3m measuring distance dB(μV)/m
Class B Equipment	30MHz to 230MHz	30	40
	230MHz to 1000MHz	37	47
FM receivers*	30MHz to 1000MHz	Fundamental 50	Fundamental 60
	30MHz to 300MHz	Harmonics 42	Harmonics 52
	300MHz to 1000MHz	Harmonics 46	Harmonics 56
*: these relaxed limits apply only to emission at the fundamental and harmonic frequencies of the local oscillator signals at all other frequencies shall be compliant with the limits of class B equipment given above.			

Note: (1) The smaller limit shall apply at the cross point between two frequency bands.

(2) Distance is the distance in meters between the measuring instrument, antenna and the closest point of any part of the device or system.

5.6. Test procedure

For Radiated emissions:

(1) The EUT was placed on a non-metallic table, 80 cm above the ground plane inside an semi-anechoic chamber.

(2) Test antenna was located ☐3m / ☒10m (see note) from the EUT on an adjustable mast. A pre-scan was first performed in order to find prominent radiated emissions. For final emissions measurements at each frequency of interest, the EUT were rotated and the antenna height was varied between 1m and 4m in order to maximize the emission. Measurements in both horizontal and vertical polarities were made and the data was recorded. In order to find the maximum emission, the relative positions of equipment and all of the interface cables were changed according to EN 55032 on radiated emission test.

(3) Spectrum frequency from 30MHz to☒1GHz /☐2GHz was investigated.

(4) For final emissions measurements at each frequency of interest, the EUT were rotated and the antenna height was varied between 1m and 4m in order to maximize the emission. Measurements in both horizontal and vertical polarities were made and the data was recorded. In order to find the maximum emission, the relative positions of equipment and all of the interface cables were changed according to EN 55032 on Radiated Emission test.

(5) For emissions from 30MHz to 1GHz, Quasi-Peak values were measured with EMI Receiver and the bandwidth of Receiver is 120 kHz.

(6) Final measurements consisted of 3 steps.

First step, frequency fine tuning to find exact emission frequency.

Second step, rechecking to search for maximum height and azimuth for interference from EUT

In final step, there are conducted measuring with quasi-peak detector for points which are detected from 1st step & 2nd step.

Results checked manually and points close to the limit line were re-measured.

(7) Pre-scan measurements were performed in all operating mode or resolution. But final measurements were performed in worst cases based on pre-scan measurements.

The EUT with following test modes were pre-tested:

No.	Test Voltage	Operation Mode	Cable Length	Resolution
1.	230V 50Hz	Mode 1 HDMI	1.8m	2560*1440@75Hz
2.			1.8m	2560*1440@60Hz
3.			1.8m	1920*1080@60Hz
4.			1.8m	800*600@60Hz
5.			1.5m	2560*1440@75Hz
6.			1.8m	DVD
7.		Mode 2 DP	1.8m	2560*1440@75Hz
8. *			1.8m	2560*1440@60Hz
9.			1.8m	1920*1080@60Hz
10.			1.8m	800*600@60Hz
11.			1.5m	2560*1440@60Hz
12.	230V 50Hz	DP 2560*1440@60Hz with 1.5m power cord		
13.	110V 60Hz	DP 2560*1440@60Hz		
14.	DP 1920*1080@60Hz with headphone			
15.	DP 1920*1080@60Hz without headphone			
* Means the worst test mode.				

5.7. Test result

PASS. (See below detailed test result)

Note: All emissions not reported below are too low against the prescribed limits.

Operating Mode 2: DP IN

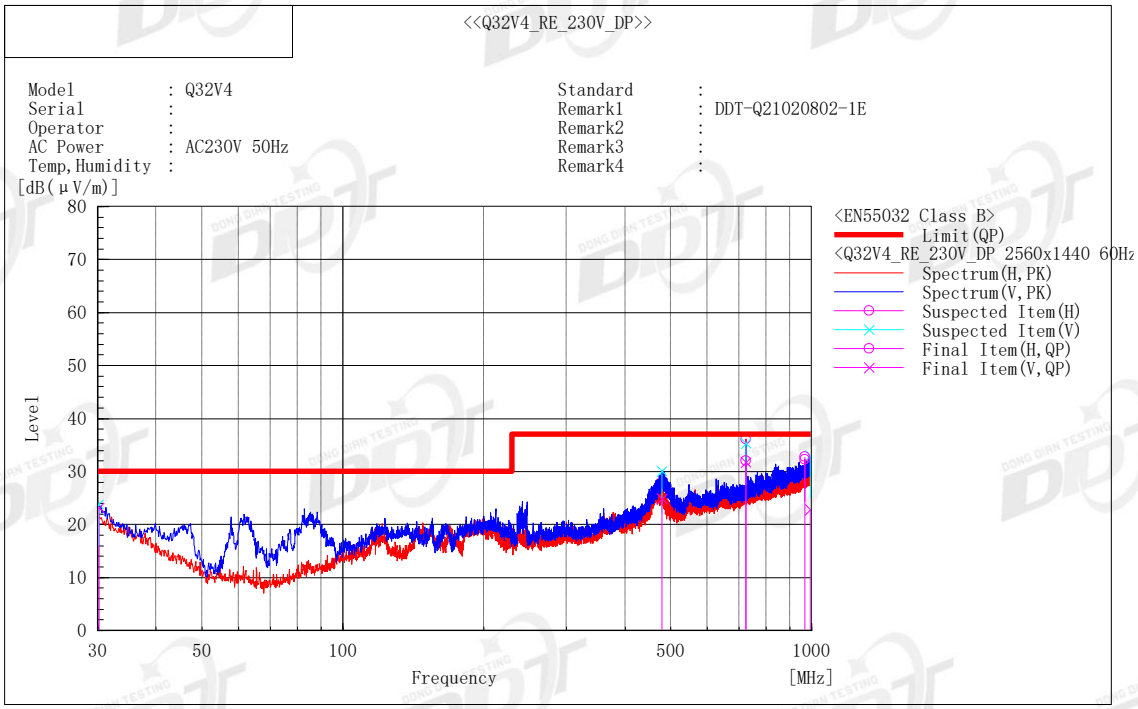

Final Result

No.	Frequency [MHz]	(P)	Reading QP [dB(μV)]	c.f [dB(1/m)]	Result QP [dB(μV/m)]	Limit QP [dB(μV/m)]	Margin QP [dB]	Height [cm]	Angle [°]	System	Remark
1	965.981	H	29.3	3.5	32.8	37.0	4.2	162.0	229.4	1	
2	724.510	H	31.8	0.2	32.0	37.0	5.0	274.0	120.6	1	
3	724.537	V	30.9	0.9	31.8	37.0	5.2	166.0	204.3	2	
4	30.232	V	28.5	-5.2	23.3	30.0	6.7	197.0	121.7	2	
5	480.010	V	27.2	-2.3	24.9	37.0	12.1	281.0	200.2	2	
6	992.466	V	16.9	6.0	22.9	37.0	14.1	327.0	335.1	2	

Note) Receiving antenna polarization : Horizontal and/or Vertical
Test Distance : 10 m, Antenna Height : 1 m to 4 m
Level QP (Quasi-Peak) = Reading QP + Factor (Antenna Factor + Cable Loss - Amp. Gain)
Margin QP (Quasi-Peak) = Limit – Level QP

6. Radiated Emissions (Above 1GHz)

6.1. General information

Test date	Feb. 24, 2021	**Test engineer**	Jason	
Climate condition	**Ambient temperature**	19.5±2℃	**Relative humidity**	24±1%
	Atmospheric pressure	102.2±0.2kPa		
Test place	10m Chamber			

6.2. Test equipment

Equipment	**Manufacturer**	**Model No.**	**Serial No.**	**Last Cal.**	**Cal. Interval**
EMI Test Receiver	R&S	ESU26	100244	Mar. 02, 2020	1 Year
Double Ridged Horn Antenna	TESEQ	BHA9118	31754	Sep. 14, 2019	2 Year
Pre-amplifier	TOYO	TPA0108-40	0934	Feb. 28,2020	1 Year
Test software	TOYO	EP5/RE	V 5.7.10	N/A	N/A
Notes. N/A means Not applicable.					

6.3. Reference standard

EN55032:2012+AC:2013(Class B)
EN55032:2015
EN55032:2015+AC:2016

6.4. Block diagram of test setup

Above 1GHz

For table-top equipment

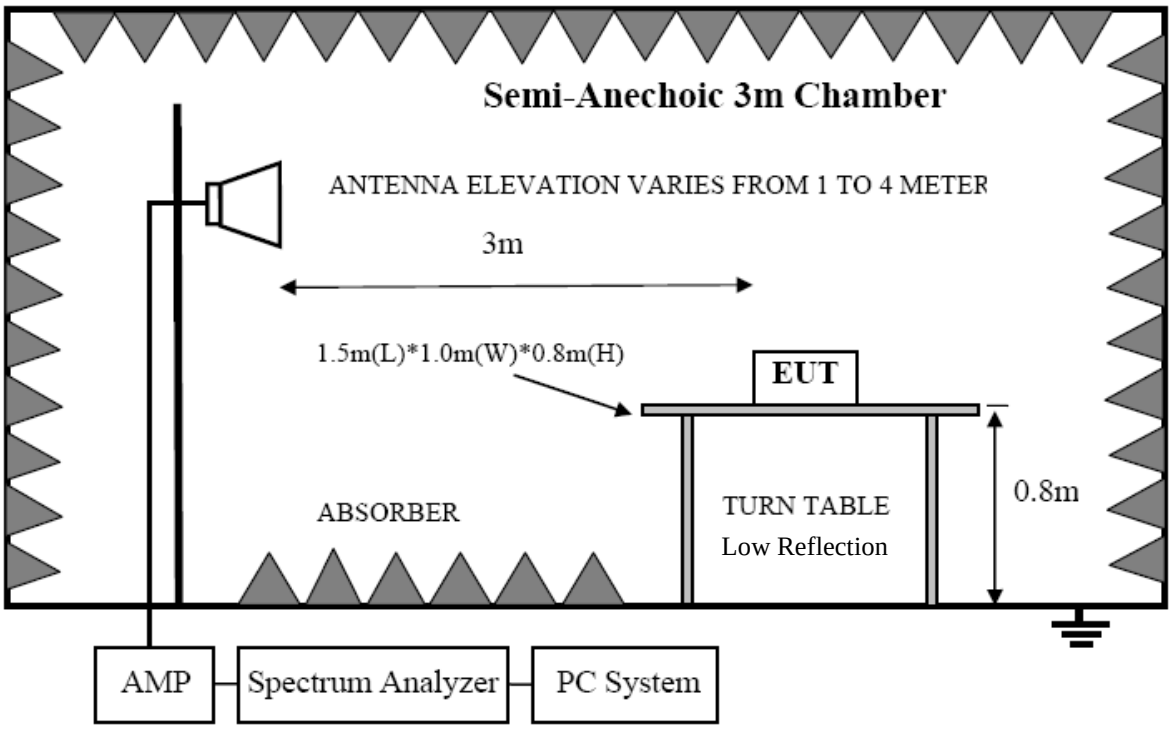

6.5. Limits

Frequency range Limits (GHz)	Limits of Class A, dB(μV/m)		Limits of Class B, dB(μV/m)	
	Peak	C/Average	Peak	C/Average
1 ~ 3	76	56	70	50
3 ~ 6	80	60	74	54
NOTE The lower limit shall apply at the transition frequency				

6.6. Test procedure

The highest internal source of an EUT is defined as the highest frequency generated or used within the EUT or on which the EUT operates or tunes.

If the highest frequency of the internal sources of the EUT is less than 108 MHz, the measurement shall only be made up to 1 GHz.

If the highest frequency of the internal sources of the EUT is between 108 MHz and 500 MHz, the measurement shall only be made up to 2 GHz.

If the highest frequency of the internal sources of the EUT is between 500 MHz and 1 GHz, the measurement shall only be made up to 5 GHz.

If the highest frequency of the internal sources of the EUT is above 1 GHz, the measurement shall be made up to 5 times the highest frequency or 6 GHz, whichever is less.

For emissions above 1GHz, both Peak and Average level were measured with Spectrum Analyzer, and the RBW is set at 1MHz.

Measurements within 20 dB of the limit were then maximized by adjusting turntable position.

Final measurements were made using an C/Average detector.

Results checked manually and points close to the limit line were re-measured.

Pre-scan measurements were performed in all operating mode or resolution. But final measurements were performed in worst cases based on pre-scan measurements.

The EUT with following test modes were pre-tested:

No.	Test Voltage	Operation Mode	Cable Length	Resolution
1.	230V 50Hz	Mode 1 HDMI	1.8m	2560*1440@75Hz
2.			1.8m	2560*1440@60Hz
3.			1.8m	1920*1080@60Hz
4.			1.8m	800*600@60Hz
5.			1.5m	800*600@60Hz
6.			1.8m	DVD
7. *		Mode 2 DP	1.8m	2560*1440@75Hz
8.			1.8m	2560*1440@60Hz
9.			1.8m	1920*1080@60Hz
10.			1.8m	800*600@60Hz
11.			1.5m	2560*1440@75Hz
12.	230V 50Hz	DP 2560*1440@75Hz with 1.5m power cord		
13.	110V 60Hz	DP 2560*1440@75Hz		
14.	DP 1920*1080@60Hz with headphone			
15.	DP 1920*1080@60Hz without headphone			
* Means the worst test mode.				

6.7. Test result

PASS. (See below detailed test result)

Note: All emissions not reported below are too low against the prescribed limits.

Operating Mode 2: DP IN

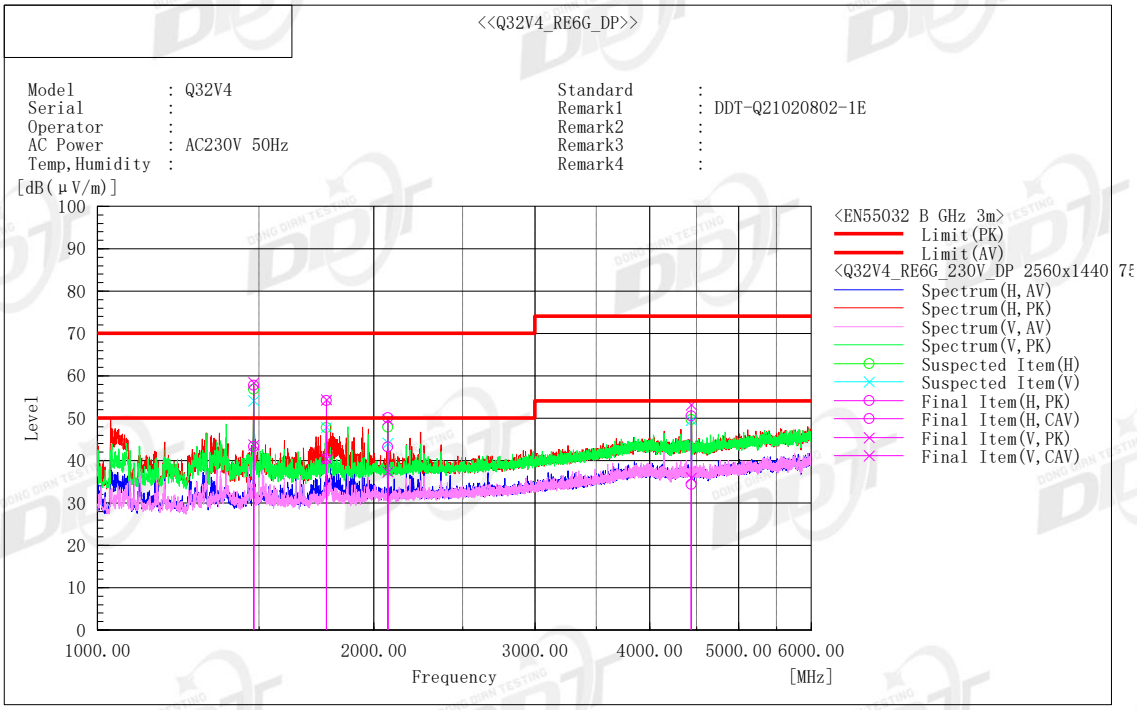

Final Result

No.	Frequency [MHz]	(P)	Reading PK [dB(μV)]	Reading CAV [dB(μV)]	c.f [dB(1/m)]	Result PK [dB(μV/m)]	Result CAV [dB(μV/m)]	Limit PK [dB(μV/m)]	Limit AV [dB(μV/m)]	Margin PK [dB]	Margin CAV [dB]	Height [cm]	Angle [°]
1	1479.989	H	75.0	60.5	-17.2	57.8	43.3	70.0	50.0	12.2	6.7	135.0	153.7
2	1480.024	V	75.6	61.0	-17.2	58.4	43.8	70.0	50.0	11.6	6.2	136.0	160.1
3	2072.003	H	64.8	57.9	-14.7	50.1	43.2	70.0	50.0	19.9	6.8	184.0	242.2
4	1776.001	V	70.3	56.5	-16.0	54.3	40.5	70.0	50.0	15.7	9.5	108.0	169.1
5	1776.001	H	70.1	56.4	-16.0	54.1	40.4	70.0	50.0	15.9	9.6	114.0	170.0
6	4440.014	H	58.3	42.2	-7.8	50.5	34.4	74.0	54.0	23.5	19.6	128.0	210.3
7	4439.966	V	61.0	43.8	-7.8	53.2	36.0	74.0	54.0	20.8	18.0	175.0	186.2
8	2072.007	V	64.3	52.1	-14.7	49.6	37.4	70.0	50.0	20.4	12.6	100.0	119.4

Note1) (P) : Abbreviation of Antenna Polarity
Note2) Reading PK / C/AV : Received raw Peak / C/Average signal
Note3) Factor = Antenna factor + Cable loss – Amplifier gain
Note4) Level PK / C/AV = Reading PK / C/AV + Factor, Real signal Peak / C/Average level
Note5) Margin PK / C/AV = Limit – Level PK / C/AV
PK : Abbreviation of Peak
C/AV : Abbreviation of CISPR Average

7. Harmonics current

7.1. General information

Test date	Feb. 09, 2021	**Test engineer**	Ethan	
Climate condition	**Ambient temperature**	20.5±2℃	**Relative humidity**	22±1%
	Atmospheric pressure	103.1±0.2kPa		
Test place	Shield Room 1#			

7.2. Test equipment

Equipment	Manufacturer	Model No.	Serial No.	Last Cal.	Cal. Interval
Power Analyzer	N4L	PPA5511	162-04584	Jan. 13, 2021	1 year
Reference Impedance Network	Voltech	IEC61000-3	1G16412021	Jan. 13, 2021	1 year
AC Power Source	Pacific	360-AMX	1235	Feb. 28, 2020	1 year
AC Power Source	Pacific	360-AMX	1234	Feb. 28, 2020	1 year
Notes. N/A means Not applicable.					

7.3. Reference standard

EN 61000-3-2:2014 (Class D)

7.4. Block diagram of test setup

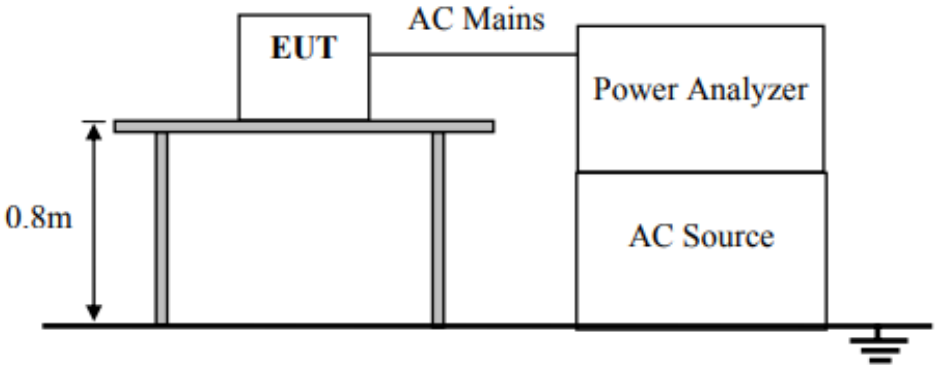

7.5. Limits

Limits for Class A equipment

Harmonic order n	Maximum permissible harmonic current A
	Odd harmonics
3	2.30
5	1.14
7	0.77

9	0.40
11	0.33
13	0.21
15 ≤ n ≤ 39 (odd harmonics only)	0.15 15/n
Even harmonics	
2	1.08
4	0.43
6	0.30
8 ≤ n ≤ 40	0.23 8/n

Limits for Class D equipment

Harmonic order n	Maximum permissible harmonic current per watt mA/W	Maximum permissible harmonic current A
3	3.4	2.30
5	1.9	1.14
7	1.0	0.77
9	0.5	0.40
11	0.35	0.33
13 ≤ n ≤ 39 (odd harmonics only)	3.85/n	See Table 1

7.6. Test result

PASS. (See below detailed test result)

Operating Mode 2: DP IN

09th February 2021 - 13:20:03	Page 1/3	IEC Soft V2.4e

IEC61000-3-2:2014
Fluctuating Harmonics

Instrument Details		
Instrument Model	PPA5511	
Instrument Serial	162-04584	
Instrument Firmware	2.17	
Instrument Version	Low Current	
Test Settings		
Class	Class D	
Mode	Measure	
Equipment Under Test		
Brand	N/A	
Model	Q32V4	
Serial	N/A	
Impedance Network ID	N/A	
Test Conditions		
	User Entered	**Measured**
Rated Voltage	230.000 V	230.948 V
Rated Current	N/A	340.627 mA
Rated Frequency	50.000 Hz	50.000 Hz
Rated Power	N/A	32.331 W
Additional Test Information		
Measured Power Factor	0.411	
Max Current THD	210.37%	
Max THC	0.3085A	
Max Power	32.435 W	
Max F.Current	147.067 mA	
Average F.Current	146.613 mA	
Minimum Current	100mA	
Test Duration	2.5 minutes	
Additional Test Details		
Operator	N/A	
Lab Name	N/A	
Location	N/A	
Notes		
Signature		
Results	**Test - N/A. Rated Power < 75W**	

09th February 2021 - 13:20:03	Ph:1 Page 2/3	IEC Soft V2.4e

IEC61000-3-2:2014 Fluctuating Harmonics

Instrument Details

Instrument Model	PPA5511
Instrument Serial	162-04584
Instrument Firmware	2.17

Equipment Under Test

Brand	N/A
Model	Q32V4
Serial	N/A

Extra Test Information

	Average	Peak	Limit
THC (A)	0.3071	0.308541	N/A
POHC (A)	0.052272	0.053264	0.016274
Voltage Crest Factor	1.405459	1.407196	N/A
Current Crest Factor	4.428445	4.516472	N/A

Harmonics Results 1/1

Harmonic	Status	Avg (A)	Avg L(A)	Avg %ofL	Peak (A)	Peak L(A)	Peak %ofL
1	PASS	0.14661	No Limit	N/A	0.14707	No Limit	N/A
2	PASS	0.001184	No Limit	N/A	0.001689	No Limit	N/A
3	FAIL - AVERAGE	0.13722	0.11028	124.42872	0.13764	0.16542	83.206384
4	PASS	0.001186	No Limit	N/A	0.001686	No Limit	N/A
5	FAIL - AVERAGE & PEAK	0.13125	0.061626	212.97828	0.13158	0.092439	142.34252
6	PASS	0.001173	No Limit	N/A	0.001673	No Limit	N/A
7	FAIL - AVERAGE & PEAK	0.1227	0.032435	378.29505	0.12307	0.048653	252.9572
8	PASS	0.001148	No Limit	N/A	0.001602	No Limit	N/A
9	FAIL - AVERAGE & PEAK	0.11198	0.016217	690.50992	0.11244	0.024326	462.23096
10	PASS	0.001126	No Limit	N/A	0.001641	No Limit	N/A
11	FAIL - AVERAGE & PEAK	0.099561	0.011352	877.03488	0.10013	0.017028	588.03148
12	PASS	0.001061	No Limit	N/A	0.001612	No Limit	N/A
13	FAIL - AVERAGE & PEAK	0.086055	0.009606	895.87434	0.086689	0.014409	601.64973
14	PASS	0.001001	No Limit	N/A	0.001506	No Limit	N/A
15	FAIL - AVERAGE & PEAK	0.072044	0.008325	865.40382	0.072764	0.012487	582.70173
16	PASS	0.000921	No Limit	N/A	0.001381	No Limit	N/A
17	FAIL - AVERAGE & PEAK	0.058167	0.007345	791.87257	0.058928	0.011018	534.82179
18	PASS	0.000832	No Limit	N/A	0.001197	No Limit	N/A
19	FAIL - AVERAGE & PEAK	0.045086	0.006572	686.00033	0.045872	0.009858	465.3064
20	PASS	0.000749	No Limit	N/A	0.001066	No Limit	N/A
21	FAIL - AVERAGE & PEAK	0.033252	0.005946	559.19548	0.034009	0.00892	381.28389
22	PASS	0.000661	No Limit	N/A	0.000984	No Limit	N/A
23	FAIL - AVERAGE & PEAK	0.023291	0.005429	428.98715	0.023965	0.008144	294.26751
24	PASS	0.000583	No Limit	N/A	0.000899	No Limit	N/A
25	FAIL - AVERAGE & PEAK	0.015841	0.005	316.82	0.016358	0.0075	218.10666
26	PASS	0.00051	No Limit	N/A	0.000791	No Limit	N/A
27	FAIL - AVERAGE & PEAK	0.011711	0.005	234.22002	0.011956	0.0075	159.41333
28	PASS	0.000471	No Limit	N/A	0.000707	No Limit	N/A
29	FAIL - AVERAGE & PEAK	0.010795	0.005	215.90001	0.01094	0.0075	145.86668
30	PASS	0.000441	No Limit	N/A	0.000639	No Limit	N/A
31	FAIL - AVERAGE & PEAK	0.011366	0.005	227.32001	0.011581	0.0075	154.41334
32	PASS	0.000428	No Limit	N/A	0.000615	No Limit	N/A
33	FAIL - AVERAGE & PEAK	0.011805	0.005	236.1	0.011929	0.0075	159.05333
34	PASS	0.000414	No Limit	N/A	0.000641	No Limit	N/A
35	FAIL - AVERAGE & PEAK	0.01145	0.005	229.00001	0.011521	0.0075	153.61334
36	PASS	0.000399	No Limit	N/A	0.000603	No Limit	N/A
37	FAIL - AVERAGE & PEAK	0.010316	0.005	206.32001	0.010437	0.0075	139.16
38	PASS	0.000385	No Limit	N/A	0.000557	No Limit	N/A
39	FAIL - AVERAGE & PEAK	0.008563	0.005	171.26801	0.008747	0.0075	116.624
40	PASS	0.00036	No Limit	N/A	0.000479	No Limit	N/A

8. Voltage fluctuation & Flicker

8.1. General information

Test date	Feb. 09, 2021	**Test engineer**	Ethan	
Climate condition	**Ambient temperature**	20.5±2℃	**Relative humidity**	22±1%
	Atmospheric pressure	103.1±0.2kPa		
Test place	Shield Room 1#			

8.2. Test equipment

Equipment	Manufacturer	Model No.	Serial No.	Last Cal.	Cal. Interval
Power Analyzer	N4L	PPA5511	162-04584	Jan. 13, 2021	1 year
Reference Impedance Network	Voltech	IEC61000-3	1G16412021	Jan. 13, 2021	1 year
AC Power Source	Pacific	360-AMX	1235	Feb. 28, 2020	1 year
AC Power Source	Pacific	360-AMX	1234	Feb. 28, 2020	1 year
Notes. N/A means Not applicable.					

8.3. Reference standard

EN 61000-3-3:2013

8.4. Block diagram of test setup

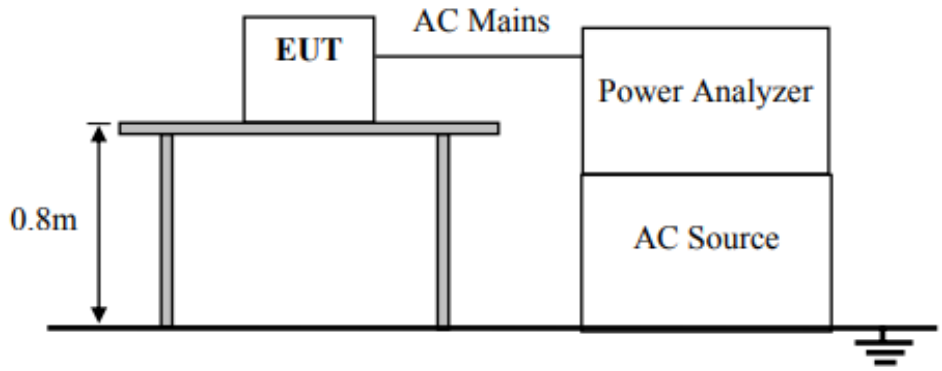

8.5. Limits

short-term flicker indicator, Pst	the relative steady-state voltage change, dc	the value of *d(t)* during a voltage change, d(t) >3.3 %	the maximum relative voltage change, dmax
1.0	3.3 %	500 ms	4 %

8.6. Test result

PASS. (See below detailed test result)

Operating Mode 2: DP IN

09th February 2021 - 13:30:34	Page 1/3	IEC Soft V2.4e

IEC61000-3-3:2013 Ed.3.0
Flickermeter

Instrument Details		
Instrument Model	PPA5511	
Instrument Serial	162-04584	
Instrument Firmware	2.17	
Instrument Version	Low Current	
Test Settings		
Class	Voltage	
Mode	Normal - 4%	
Minimum Current	300mA	
PST	10.00 minutes	
PLT	1 PSTs	
Equipment Under Test		
Brand	N/A	
Model	Q32V4	
Serial	N/A	
Impedance Network ID	N/A	
Test Conditions		
	User Entered	**Measured**
Rated Voltage	230.000 V	230.916 V
Rated Current	N/A	N/A
Rated Frequency	50.000 Hz	50.000 Hz
Rated Power	N/A	N/A
D max	0.1597% (Limit: 4%)	
T max	0.0000 s (Limit: 0.5 s)	
DC max	0.0044% (Limit: 3.3%)	
Additional Test Details		
Operator	N/A	
Lab Name	N/A	
Location	N/A	
Notes		
Signature		
Results	**Phase1: PASS**	

9. Electrostatic Discharge

9.1. General information

Test date	Feb. 25, 2021	**Test engineer**	Novak	
Climate condition	**Ambient temperature**	22.3±1℃	**Relative humidity**	36±1%
	Atmospheric pressure	102.7±0.2kPa		
Test place	Shield Room 3#			

9.2. Test equipment

Equipment	Manufacturer	Model No.	Serial No.	Last Cal.	Cal. Interval
ESD Generator	TESEQ	NSG 438	1040	Oct. 09, 2020	1 Year

9.3. Test and reference standards

IEC-61000-4-2:2008

9.4. Block diagram of test setup

(1) Table-top equipment

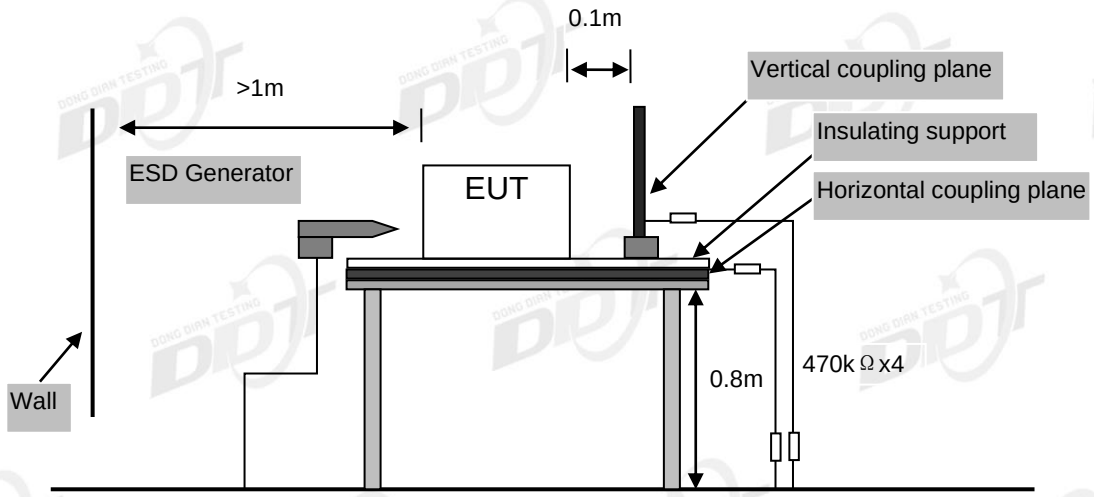

(2) Floor-standing equipment

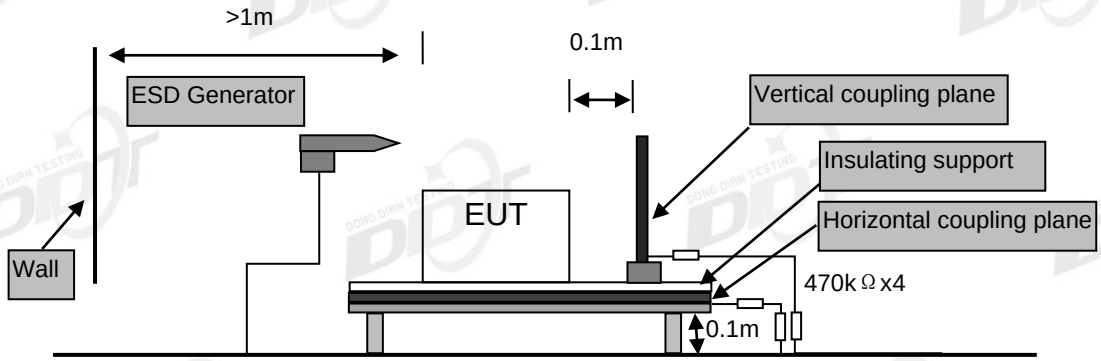

9.5. Test levels and performance criterion

Test Level		Performance Criteria
Air Discharge	±2kV, ±4kV and ±8kV	**B**
Contact Discharge	±4kV	

Performance criteria B description: During the test, degradation of performance is allowed. However, no change of operating state or stored data is allowed to persist after the test. After the test, the EUT shall continue to operate as intended without operator intervention. No degradation of performance or loss of function is allowed, after the application of the phenomena below a performance level specified by the manufacturer, when the EUT is used as intended.

9.6. Test procedure

Air Discharge:
The test was applied on non-conductive surfaces of EUT. The round discharge tip of the discharge electrode was approached as fast as possible to touch the EUT. After each discharge, the discharge electrode was removed from the EUT. The generator was re-triggered for a new single discharge and repeated 20 times for each pre-selected test point. This procedure was repeated until all the air discharge completed.

Contact Discharge:
All the procedure was same as air discharge. Except that the generator was re-triggered for a new single discharge. The tip of the discharge electrode was touching the EUT before the discharge switch was operated.

Indirect discharge for horizontal coupling plane:
At least 20 single discharges were applied to the horizontal coupling plane, at points on each side of the EUT. The discharge electrode positions vertically at a distance of 0.1m from the EUT and with the discharge electrode touching the coupling plane.

Indirect discharge for vertical coupling plane:
At least 20 single discharges were applied to the center of one vertical edge of the coupling plane. The coupling plane, of dimensions 0.5m X 0.5m, was placed parallel to, and positioned at a distance of 0.1m from the EUT. Discharges were applied to the coupling plane, with this plane in sufficient different positions that the four faces of the EUT are completely illuminated.

9.7. Test result

Power supply: AC 230V/50Hz, AC 110V/60Hz

Test Times: 20 times at each point for contact discharge; 20 times at each point for air discharge.

Operation Mode	Type of discharge	Test Level	Test Point	Performance		Result
				Required	Observation	(Pass/Fail)
Mode 1	Contact to EUT	±4kV	5,7	B	A	Pass
	Contact to Coupling Planes	±4kV	Coupling Planes	B	A	Pass
	Air	±2kV, ±4kV, and ±8kV	1,2,3,4,5,6	B	A	Pass
Mode 2	Contact to EUT	±4kV	4,7	B	A	Pass
	Contact to Coupling Planes	±4kV	Coupling Planes	B	A	Pass
	Air	±2kV, ±4kV, and ±8kV	1,2,3,4,5,6	B	A	Pass

Test Point:

No.	Description	No.	Description	No.	Description
1	Panel	5	DP	9	/
2	Button	6	Audio	10	/
3	Gap	7	Screw	11	/
4	HDMI	8	/	12	/

Observation Description:
A: Operation as intend, no loss of function during test and after test.

Photo of ESD point on EUT

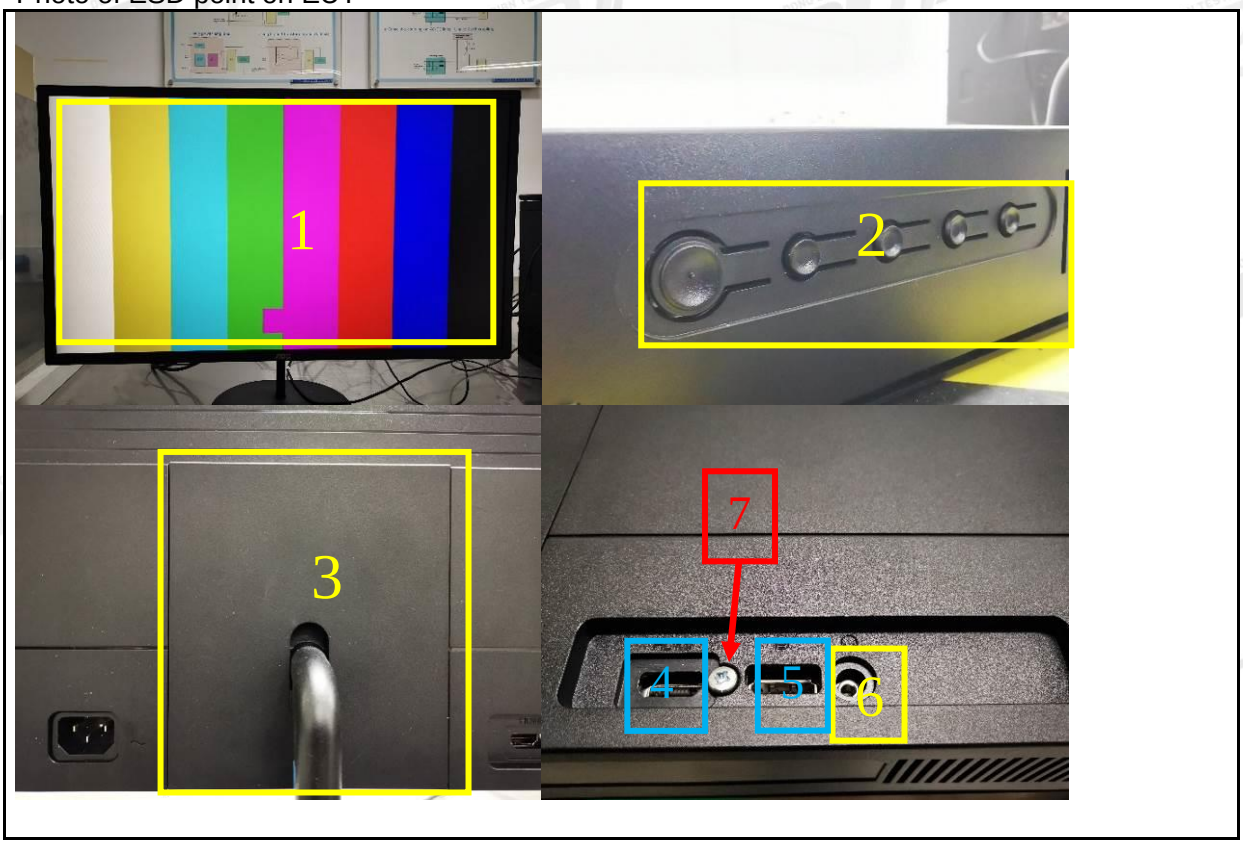

10. Continuous Radio Frequency Disturbances

10.1. General information

Test date	Feb. 24, 2021	**Test engineer**	Thomas	
Climate condition	**Ambient temperature**	18.2±2℃	**Relative humidity**	26±1%
	Atmospheric pressure	103.2±0.2kPa		
Test place	RS Chamber			

10.2. Test equipment

Equipment	Manufacturer	Model No.	Serial No.	Last Cal.	Cal. Interval
Signal Generator	R&S	SMB100A	104909	Feb. 26, 2020	1 Year
Amplifier	BONN	BLMA 1060-250	1811750	Sep. 23, 2020	1 Year
Amplifier	TESEQ	CBA 1G-1200B	V2303-0618	Sep. 23, 2020	1 Year
Power meter	R&S	NRP	102424	Feb. 26, 2020	1 Year
Power sensor	R&S	NRP-Z91	100937	Feb. 26, 2020	1 Year
Power sensor	R&S	NRP-Z91	100938	Feb. 26, 2020	1 Year
Log-periodic antenna	Schwarzbeck	STLP 9149	9149-059	N/A	N/A
Log-periodic antenna	Schwarzbeck	STLP 9128 E special	9128ES-171	N/A	N/A
Audio Analyzer	R&S	UPV	101525	Feb. 27, 2020	1 Year

10.3. Test and reference standards

IEC 61000-4-3:2006+A1:2007+A2:2010

10.4. Block diagram of test setup

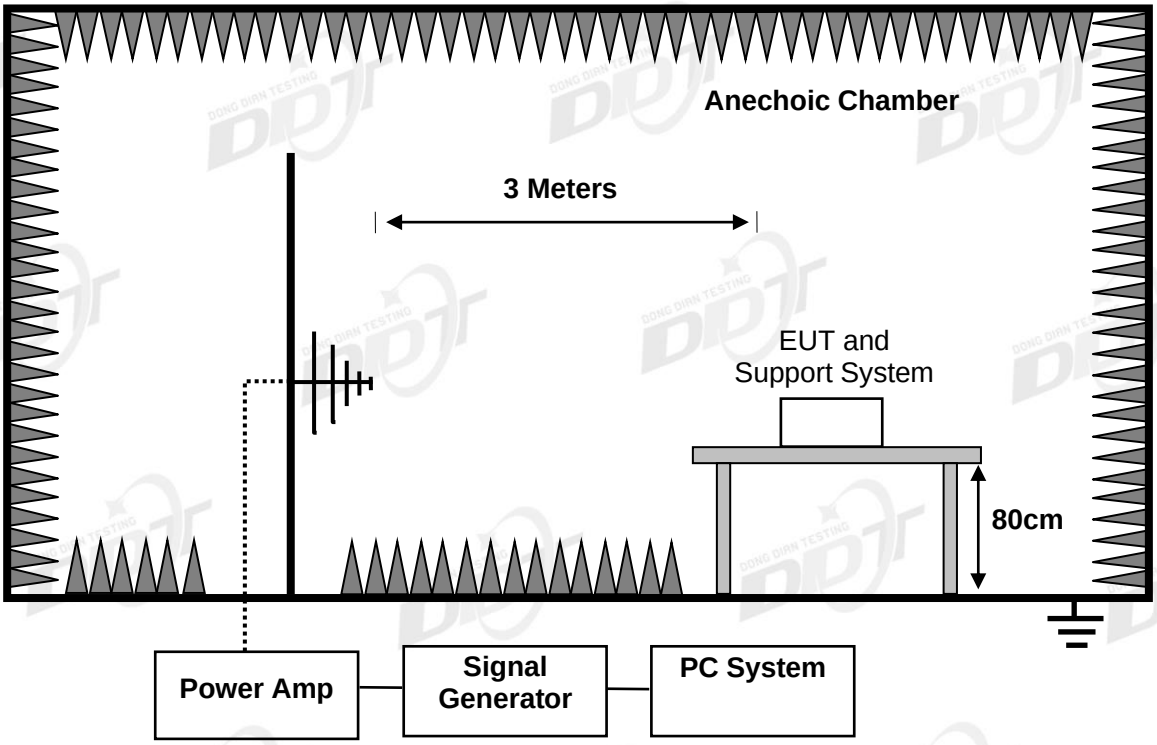

10.5. Test levels and performance criterion

Swept frequency test		Performance Criteria
Frequency (MHz)	80 to 1000	A
Field Strength	3V/m rms voltage level of the unmodulated signal	
Modulation	AM modulated to a depth of 80% by a sine wave of ☒1kHz,☐400Hz (note 1)	
Step Size	1% increments	
Dwell time	< 5 Sec.	

Spot frequency test		Performance Criteria
Frequency (MHz)	1800, 2600, 3500, 5000	A
Field Strength	3V/m rms voltage level of the unmodulated signal	
Modulation	AM modulated to a depth of 80% by a sine wave of ☒1kHz, ☐400Hz (note 1)	
Dwell time	< 5 Sec.	

Note 1: The 1kHz modulation may be replaced by a different audio modulation frequency more appropriate for a given EUT if, for example, 1kHz is not within the operating audio range of the EUT.

Performance criteria A description for devices with the audio output function: The measured acoustic interference ratio and/or the measured electrical interference ratio during the test shall be -20 dB or better.
For equipment with audio output function:
☐The acoustic measurement method was selected according to clause G6.4.1 of EN 55035.
☒The electrical measurement method was selected according to clause G6.4.2 of EN 55035.

Performance criteria A for devices with the telephony function.

Frequency range MHz	Acoustic or electrical interference ratio	Equivalent direct measurement		
		dB(SPL)	Digital dBm0	Analogue dBm0
80 to 1000	-0 dB	75	-30	-30

Note: At the step in the frequency range, the lower limit shall be applied.
The interference ratio (electrical or acoustic) shall meet the limits in column 2; or,
The acoustic level of the demodulated audio shall be less than the limits in column 3; or
The digitally coded level of demodulated audio shall be less than limits in column 4; or,
The analogue level of the demodulated audio shall be less than the limits in column 5.

Performance criteria A description for other devices: During and after the test the EUT shall continue to operate as intended without operator intervention. No degradation of performance or loss of function is allowed below a minimum performance level specified by the manufacturer when the EUT is used as intended.

10.6. Test procedure

The field sensor is placed on the EUT table (0.8 meter above the ground) which is 3 meters away from the transmitting antenna. Through the signal generator, power amplifier and transmitting antenna to produce a uniformity field strength (3V/m measured by field sensor) around the EUT table from frequency range specified and records the signal generator‘s output level at the same time for whole measured frequency range. Then, put EUT and its simulators on the EUT turn table and keep them 3 meters away from the transmitting antenna which is mounted on an antenna tower and fixes at 1.4 meter height above the ground. Using the recorded signal generator’s output level to measure the EUT from frequency range specified and both horizontal & vertical polarization of antenna must be set and measured. Each of the four sides of EUT must be faced this transmitting antenna and measures individually.

10.7. Test result

Power supply: AC 230V/50Hz, AC 110V/60Hz

Field Strength : ☒3V/m ☐10V/m Steps: ☒1% ☐other: Dwell time: ☒1s ☐other:

Swept Frequency Range: ☒80MHz---1GHz; ☒1800MHz, 2600MHz, 3500MHz, 5000MHz; ☐ other:

Modulation : ☐None ☒AM ☒1kHz ☐400Hz Modulation depth: ☒80% ☐other:

Operation Mode	EUT Position towards antenna	Antenna: Horizontal		Antenna: Vertical		Result
		Required	Observation	Required	Observation	(Pass/Fail)
Mode 1	Front	A	A	A	A	Pass
	Right	A	A	A	A	Pass
	Rear	A	A	A	A	Pass
	Left	A	A	A	A	Pass
Mode 2	Front	A	A	A	A	Pass
	Right	A	A	A	A	Pass
	Rear	A	A	A	A	Pass
	Left	A	A	A	A	Pass

HDMI mode: Acoustic interference ratio= -31.60 dB ≤-20dB.
DP mode: Acoustic interference ratio= -33.11 dB ≤-20dB.
Note 1: this row only for the device with audio output function.
Note 2: this device without the telephony function.

Observation Description:
A: Operation as intend, no loss of function during test and after test.

11. Electrical Fast Transients (EFT)

11.1. General information

Test date	Feb. 22, 2021	**Test engineer**	Novak	
Climate condition	**Ambient temperature**	22.1±1℃	**Relative humidity**	34±1%
	Atmospheric pressure	103.0±0.2kPa		
Test place	Shield Room 3#			

11.2. Test equipment

Equipment	Manufacturer	Model No.	Serial No.	Last Cal.	Cal. Interval
EFT Generator	TESEQ	NSG3060	210	Feb. 28, 2020	1 Year
Coupling/Decoupling Network	TESEQ	CDN3061	210	Feb. 28, 2020	1 Year

11.3. Test and reference standards

IEC-61000-4-4:2012

11.4. Block diagram of test setup

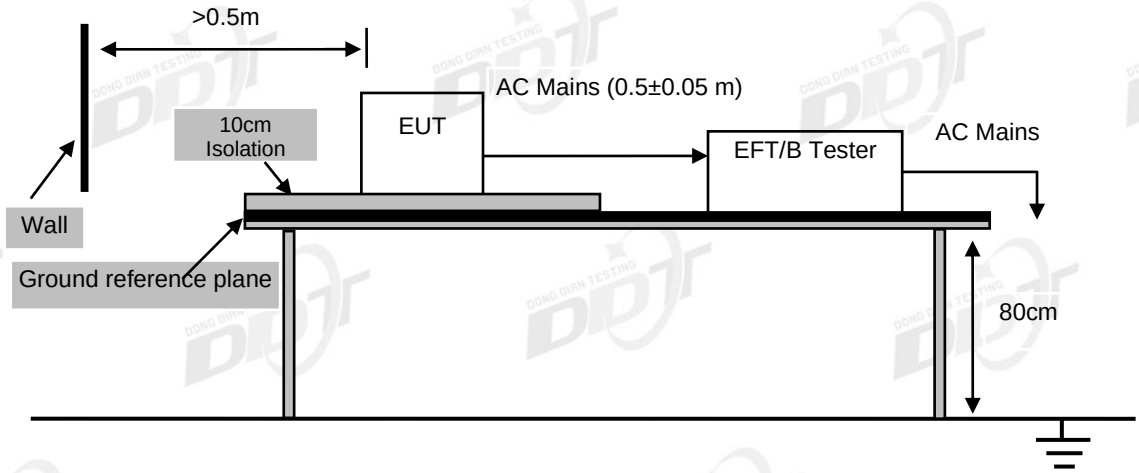

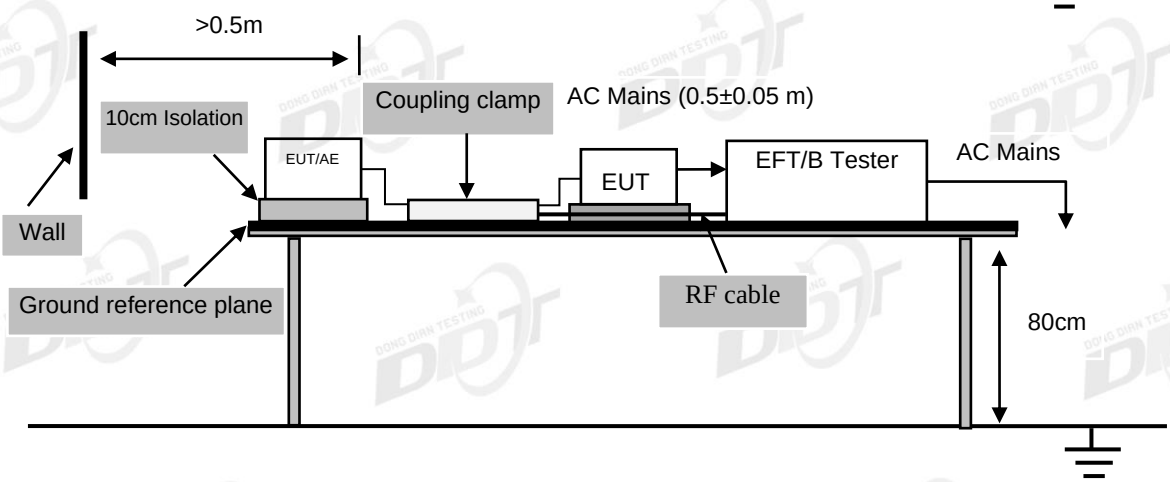

11.5. Test levels and performance criterion

Test Level			Performance Criteria
Test voltage	±1kV For AC mains Port	±0.5kV for DC input or signal Port	B
Repetition Frequency	5kHz	5kHz	
Burst Duration	15ms	15ms	
Burst Period	300ms	300ms	
Inject Time(s)	120s	120s	
Inject Method	Direct for AC mains port	Direct for signal port Direct for dc input port	
Inject Line	AC Mains of adapter	DC input of adapter or Capacitive coupling clamp	

Note: This test shall be additionally performed on analogue/digital data ports, and DC network power ports, of radio equipment and associated ancillary equipment, if the cables may be longer than 3 m.
Performance criteria B description: During the test, degradation of performance is allowed. However, no change of operating state or stored data is allowed to persist after the test. After the test, the EUT shall continue to operate as intended without operator intervention. No degradation of performance or loss of function is allowed, after the application of the phenomena below a performance level specified by the manufacturer, when the EUT is used as intended.

11.6. Test Procedure

The EUT and its simulators were placed on the ground reference plane and were insulated from it by a wood support 0.1m ± 0.01m thick. The ground reference plane was 1m*1m metallic sheet with 0.65mm minimum thickness. This reference ground plane was project beyond the EUT by at least 0.1m on all sides and the minimum distance between EUT and all other conductive structure, except the ground plane was more than 0.5m. All cables to the EUT was placed on the wood support, cables not subject to EFT/B was routed as far as possible from the cable under test to minimize the coupling between the cables.
For DC input and AC power ports:
The EUT was connected to the power mains by using a coupling device that couples the EFT interference signal to AC power lines. Both positive transients and negative transients of test voltage were applied during compliance test and the duration of the test can’t less than 2mins.
For signal ports:
The capacitive coupling clamp was connected to the power by using a coupling device that couples the EFT interference signal to capacitive coupling clamp. Both positive transients and negative transients of test voltage were applied during compliance test and the duration of the test can’t less than 2mins.

11.7. Test result

Power supply: AC 230V/50Hz, AC 110V/60Hz						
Port ☒ AC Mains ☐DC Supply ☐Signal			**Burst Period**: ☒ 300ms ☐Other:			
Coupling: ☒Direct ☐Capacitive Clamp			**Test Time**: ☒ 120S ☐Other:			
Repetition Frequency: ☒ 5KHz ☐Other:			**Burst Durations**: ☒15ms ☐Other:			
Operation Mode	**Line/port**	**Test Voltage**	**Performance**			**Result**
			Required	**Observation (+)**	**Observation (-)**	**(Pass/Fail)**
Mode 1	L	±1kV	B	A	A	Pass
	N	±1kV	B	A	A	Pass
	L-N	±1kV	B	A	A	Pass
	PE	±1kV	B	A	A	Pass
	L-PE	±1kV	B	A	A	Pass
	N-PE	±1kV	B	A	A	Pass
	L-N-PE	±1kV	B	A	A	Pass
Mode 2	L	±1kV	B	A	A	Pass
	N	±1kV	B	A	A	Pass
	L-N	±1kV	B	A	A	Pass
	PE	±1kV	B	A	A	Pass
	L-PE	±1kV	B	A	A	Pass
	N-PE	±1kV	B	A	A	Pass
	L-N-PE	±1kV	B	A	A	Pass
Observation Description: A: Operation as intend, no loss of function during test and after test.						

12. Surges

12.1. General information

Test date	Feb. 22, 2021	**Test engineer**	Novak	
Climate condition	**Ambient temperature**	22.1±1℃	**Relative humidity**	34±1%
	Atmospheric pressure	103.0±0.2kPa		
Test place	Shield Room 3#			

12.2. Test equipment

Equipment	Manufacturer	Model No.	Serial No.	Last Cal.	Cal. Interval
Surge Generator	TESEQ	NSG3060	210	Feb. 28, 2020	1 Year
Coupling/Decoupling Network	TESEQ	CDN3061	210	Feb. 28, 2020	1 Year
Surge Impulse Module	TESEQ	CWM3650	196	Feb. 28, 2020	1 Year

12.3. Test and reference standards

IEC-61000-4-5:2014

12.4. Block diagram of test setup

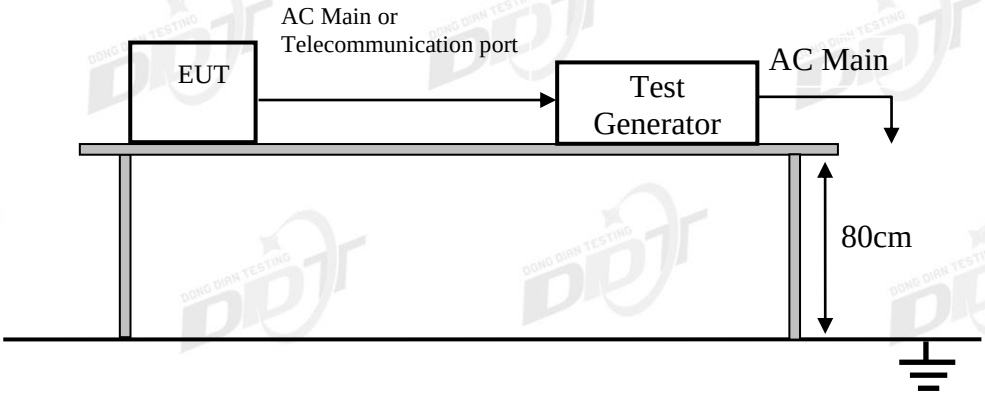

12.5. Test levels and performance criterion

Test level for AC mains ports		Performance Criterion
Line to Line	1kV 1.2/50(8/20) μs	B
Line to Ground	2kV 1.2/50(8/20) μs	B
Analogue/digital data port, Port type: unshielded symmetrical		Performance Criterion
Line to Ground	1 kV and 4kV 10/700(5/320) μs (used with the primary protection)	C
Line to Ground	1 kV 10/700(5/320) μs (used without the primary protection)	C

Note: Applicable only to ports which, according to the manufacturer's specification, the cable lengths greater than 3m.		
Analogue/digital data port, Port type: coaxial or shielded		Performance Criterion
Shield to ground	0.5 kV 1.2/50(8/20) μs	B
Note: Applicable only to ports which, according to the manufacturer's specification, the cable lengths greater than 3m.		
DC network power port		Performance Criterion
Line to reference ground	0.5 kV 1.2/50(8/20) μs	B
Note: Applicable only to ports which, according to the manufacturer's specification, 1. The cable lengths greater than 3m; 2. May connect directly to outdoor cables.		

Performance criteria B description: During the test, degradation of performance is allowed. However, no change of operating state or stored data is allowed to persist after the test. After the test, the EUT shall continue to operate as intended without operator intervention. No degradation of performance or loss of function is allowed, after the application of the phenomena below a performance level specified by the manufacturer, when the EUT is used as intended.

12.6. Test Procedure

For line-to-neutral coupling mode, provide a 0.5 kV/1 kV 1.2/50 us voltage surge (at open-circuit condition) and 8/20 us current surge to EUT selected points.
For line-to-ground coupling mode, provide a 0.5 kV/1 kV/2 kV 1.2/50 us voltage surge (at open-circuit condition) and 8/20 us current surge to EUT selected points.

The number of pulses applied shall be as follows:
• Five positive pulses line-to-neutral at 90° phase
• Five negative pulses line-to-neutral at 270° phase

The following additional pulses are required only if the EUT has an earth connection or if the EUT is earthed via any AE.
• Five positive pulses line-to-earth at 90° phase
• Five negative pulses line-to-earth at 270° phase
• Five negative pulses neutral-to-earth at 90° phase
• Five positive pulses neutral-to-earth at 270° phase
Maximum 1/min repetition rate are applied during test.
Different phase angles are done individually.

For telecommunication surge test, each line of internet port to ground coupling mode, provide a 1.0kV 10/700us voltage surge (at open-circuit condition) and 5/320us current surge to EUT selected points.

At least 5 positive and 5 negative (polarity) tests with a maximum 1/min repetition rate are applied during test.

Record the EUT operating situation during compliance test and decide the EUT immunity criterion for above each test.

12.7. Test result

Power supply: AC 230V/50Hz, AC 110V/60Hz

Line: ☒ AC Mains ☐DC Supply ☐Telecommunication port ☐Signal port

Wave Type: ☒ 1.2/50us-8/20us ☐10/700 us-5/320us **Internal impedance**: ☒2Ω☒12Ω☐25Ω☐40Ω☐160Ω

Pulse times: 5 times at each polarity Pulse Interval: 60S **Voltage Phase**: ☐ 0°, 90°, 180°, 270°☒90°, 270°

Operation Mode	Line/ Port	0.5kV			1kV			2kV			Result
		Required	Observation		Required	Observation		Required	Observation		Pass/Fail
			+	-		+	-		+	-	
Mode 1	L-N	B	A	A	B	A	A	/	/	/	**Pass**
	L-Pe	B	A	A	B	A	A	B	A	A	**Pass**
	N-Pe	B	A	A	B	A	A	B	A	A	**Pass**
Mode 2	L-N	B	A	A	B	A	A	/	/	/	**Pass**
	L-Pe	B	A	A	B	A	A	B	A	A	**Pass**
	N-Pe	B	A	A	B	A	A	B	A	A	**Pass**

Observation Description:
A: Operation as intend, no loss of function during test and after test.

13. Continuous Conducted Disturbances

13.1. General information

Test date	Feb. 25, 2021	**Test engineer**	Novak	
Climate condition	**Ambient temperature**	22.3±1℃	**Relative humidity**	36±1%
	Atmospheric pressure	102.7±0.2kPa		
Test place	Shield Room 3#			

13.2. Test Equipment

Equipment	Manufacturer	Model No.	Serial No.	Last Cal.	Cal. Interval
Signal Generator	R&S	SMB100A	103231	Feb. 26, 2020	1 Year
CDN	TESEQ	CDN M016	28987	Feb. 28,2020	1 Year
Audio Analyzer	R&S	UPV	101525	Feb. 27,2020	1 Year
RF Power Amplifiers	AR	75A250A	0332892	Feb. 27,2020	1 Year
Test Software	R&S	EMC 32	Ver 10.28.0	N/A	N/A

13.3. Test and reference standards

IEC-61000-4-6:2013

13.4. Block diagram of test setup

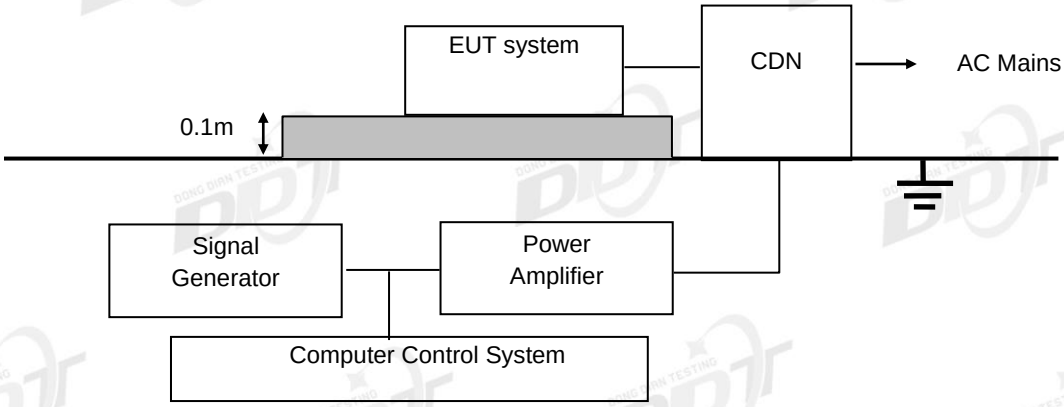

For audio output function (electrical measurement, direct connection to EUT)

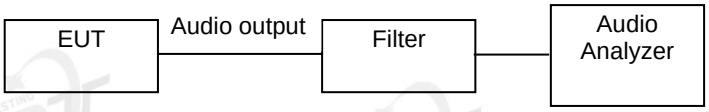

For audio output function (acoustic measurement)

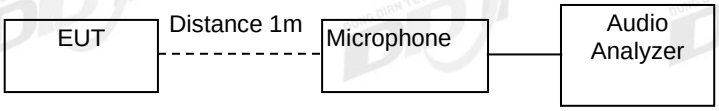

For audio output function (on-ear acoustic measurement)

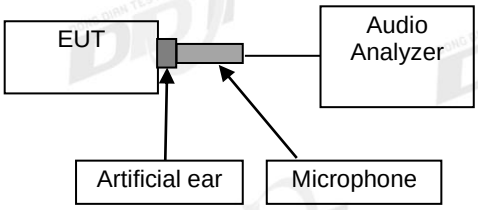

13.5. Test levels and performance criterion

Test Level		Performance Criteria
Frequency and Field Strength	0.15MHz to 10MHz, 3V rms voltage level of the unmodulated signal	A
	10MHz to 30MHz, 3V to 1V rms voltage level of the unmodulated signal	
	30MHz to 80MHz, 1V rms voltage level of the unmodulated signal	
Modulation	AM modulated to a depth of 80% by a sine wave of ☒1kHz, ☐400Hz (note 1)	
Step Size	1% increments	
Dwell time	1 Sec.	

Note 1: The 1kHz modulation may be replaced by a different audio modulation frequency more appropriate for a given EUT if, for example, 1kHz is not within the operating audio range of the EUT.

Performance criteria A description for devices with the audio output function: The measured acoustic interference ratio and/or the measured electrical interference ratio during the test shall be -20 dB or better.
☐The acoustic measurement method was selected according to clause G6.4.1 of EN 55035.
☒The electrical measurement method was selected according to clause G6.4.2 of EN 55035.

Performance criteria A for devices with the telephony function.

Frequency range MHz	Acoustic or electrical interference ratio	Equivalent direct measurement		
		dB(SPL)	Digital dBm0	Analogue dBm0
0.15 to 30	-20 dB	55	-50	-50
30 to 80	-10 dB	65	-40	-40

Note: At the step in the frequency range, the lower limit shall be applied.
The interference ratio (electrical or acoustic) shall meet the limits in column 2; or,
The acoustic level of the demodulated audio shall be less than the limits in column 3; or
The digitally coded level of demodulated audio shall be less than limits in column 4; or,
The analogue level of the demodulated audio shall be less than the limits in column 5.
Performance criteria A description for other devices: During and after the test the EUT shall continue to operate as intended without operator intervention. No degradation of performance or loss of function is allowed below a minimum performance level specified by the manufacturer when the EUT is used as intended.

13.6. Test procedure

The EUT are placed on an insulating support 0.1m high above a ground reference plane. CDN (coupling and decoupling device) is placed on the ground plane about 0.3m from EUT. Cables between CDN and EUT are as short as possible, and their height above the ground reference plane shall be between 30 and 50 mm (where possible).

The disturbance signal described below is injected to EUT through CDN.
The EUT operates within its operational mode(s) under intended climatic conditions after power on.
The frequency range is swept from 0.150MHz to ☒80MHz/☐230MHz, the interference signal level according to clause 10.5, and with the disturbance signal 80% amplitude modulated with a ☒1kHz / ☐400Hz sine wave.
The rate of sweep shall not exceed $1.5*10^{-3}$decades/s. Where the frequency is swept incrementally; the step size shall not exceed 1% of the start and thereafter 1% of the preceding frequency value.
Recording the EUT operating situation during compliance testing and decide the EUT immunity criterion.

13.7. Test result

Power supply: AC 230V/50Hz, AC 110V/60Hz						
Modulation Signal: ☒1kHz ☐400Hz 80% AM ☐Other: Steps: ☒1% ☐other: Dwell time: ☒1s ☐other:						
Operation mode	Frequency Range	Injected Position	Strength(e.m.f) (unmodulated)	Required	Observation	Result (Pass/Fail)
Mode 1	0.15MHz-10MHz	AC port	3V	A	A	Pass
	10MHz-30MHz	AC port	3V-1V	A	A	Pass
	30MHz-80MHz	AC port	1V	A	A	Pass
Mode 2	0.15MHz-10MHz	AC port	3V	A	A	Pass
	10MHz-30MHz	AC port	3V-1V	A	A	Pass
	30MHz-80MHz	AC port	1V	A	A	Pass
HDMI mode: Acoustic interference ratio= -33.06 dB ≤-20dB. DP mode: Acoustic interference ratio= -34.20 dB ≤-20dB. Note 1: this row only for the device with audio output function. Note 2: this device without the telephony function.						
Observation Description: A: Operation as intend, no loss of function during test and after test.						

14. Power-Frequency Magnetic Fields

14.1. General information

Test date	Feb. 22, 2021	**Test engineer**	Novak	
Climate condition	**Ambient temperature**	22.1±1℃	**Relative humidity**	34±1%
	Atmospheric pressure	103.0±0.2kPa		
Test place	Shield Room 3#			

14.2. Test equipment

Equipment	**Manufacturer**	**Model No.**	**Serial No.**	**Last Cal.**	**Cal. Interval**
Magnetic Field Coil	TESEQ	INA 702	199	Feb. 27, 2020	1 Year
Magnetic Field Option	TESEQ	MFO 6502	123	Feb. 27, 2020	1 Year

14.3. Test and reference standards

IEC-61000-4-8:2009

14.4. Block diagram of test setup

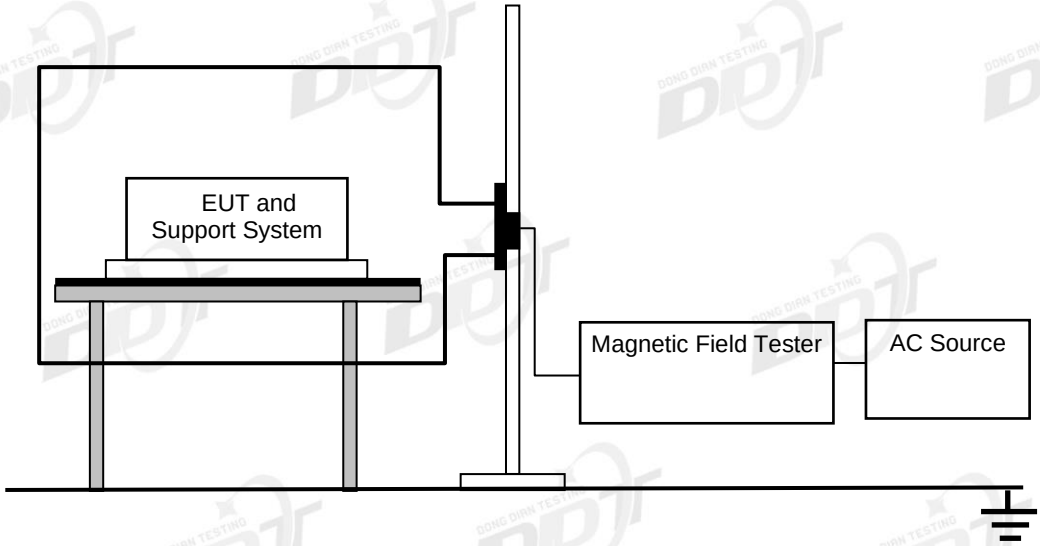

14.5. Test levels and performance criterion

Level	Magnetic Field Strength (A/m)	Performance Criterion
1	1	A

Performance criteria A description: During and after the test the EUT shall continue to operate as intended without operator intervention. No degradation of performance or loss of function is allowed below a minimum performance level specified by the manufacturer when the EUT is used as intended.

14.6. Test procedure

The EUT shall be subjected to the test magnetic field by using the induction coil of standard dimensions (1m*1m) and shown in Section 14.4 Then induction coil shall then be rotated by 90°in order to expose the EUT to the test field with different orientations.

14.7. Test result

Power supply: AC 230V/50Hz, AC 110V/60Hz

Operation Mode	Test Level	Testing Duration	Coil Orientation	Required	Observation	Result (Pass/Fail)
Mode 1	1A/m	5min/coil	X	A	A	Pass
		5min/coil	Y	A	A	Pass
		5min/coil	Z	A	A	Pass
Mode 2	1A/m	5min/coil	X	A	A	Pass
		5min/coil	Y	A	A	Pass
		5min/coil	Z	A	A	Pass

Observation Description:
A: Operation as intend, no loss of function during test and after test.

15. Voltage Dips and Interruptions

15.1. General information

Test date	Feb. 22, 2021	**Test engineer**	Novak	
Climate condition	**Ambient temperature**	22.1±1℃	**Relative humidity**	34±1%
	Atmospheric pressure	103.0±0.2kPa		
Test place	Shield Room 3#			

15.2. Test equipment

Equipment	Manufacturer	Model No.	Serial No.	Last Cal.	Cal. Interval
VAR	TESEQ	3005-D16	94	Feb. 28, 2020	1 Year

15.3. Test and reference standards

IEC-61000-4-11:2004, IEC-61000-4-11:2004+A1:2017

15.4. Block diagram of test setup

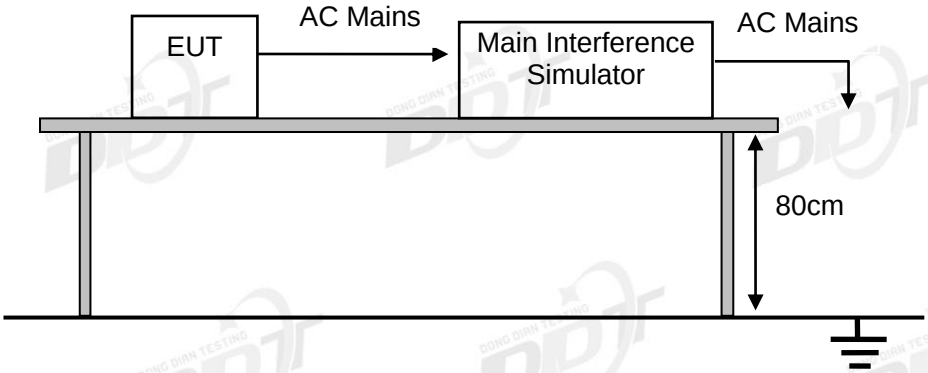

15.5. Test levels and performance criterion

Test Level %UT	Duration (in period)	Performance Criterion
＜5	0.5	B
70	25 for 50Hz/30 for 60Hz	C
＜5	250 for 50Hz/300 for 60Hz	C

Performance criteria B description: During the test, degradation of performance is allowed. However, no change of operating state or stored data is allowed to persist after the test. After the test, the EUT shall continue to operate as intended without operator intervention. No degradation of performance or loss of function is allowed, after the application of the phenomena below a performance level specified by the manufacturer, when the EUT is used as intended.
Performance criteria C description: During and after testing, a temporary loss of function is allowed, provided the function is self recoverable, or can be restored by the operation of the controls or cycling of the power to the EUT by the user in accordance with the manufacturer's instructions. Functions, and/or information stored in non-volatile memory, or protected by a battery backup, shall not be lost.

15.6. Test procedure

The EUT and test generator were setup as shown. The interruptions are introduced at selected phase angles with specified duration. Record any degradation of performance.

15.7. Test result

Power Supply: AC 100V/60Hz						
Memo:						
Operation Mode	Voltage Dips & Short Interruptions %Ur	Duration (in period)	Phase Angle	Required	Observation	Result (Pass/Fail)
Mode 1	0	0.5P	0°,180°	B	A	Pass
	70	30P	0°,180°	C	A	Pass
	0	300P	0°,180°	C	B	Pass
Mode 2	0	0.5P	0°,180°	B	A	Pass
	70	30P	0°,180°	C	A	Pass
	0	300P	0°,180°	C	B	Pass
Observation Description: A: Operation as intend no loss of function during test and after test. B: Temporary loss of function or degradation of performance which ceases after the disturbance ceases, and from which the equipment under test recovers its normal performance, without operator intervention						

Power Supply: AC 240V/50Hz						
Memo:						
Operation Mode	Voltage Dips & Short Interruptions %Ur	Duration (in period)	Phase Angle	Required	Observation	Result (Pass/Fail)
Mode 1	0	0.5P	0°,180°	B	A	Pass
	70	25P	0°,180°	C	A	Pass
	0	250P	0°,180°	C	B	Pass
Mode 2	0	0.5P	0°,180°	B	A	Pass
	70	25P	0°,180°	C	A	Pass
	0	250P	0°,180°	C	B	Pass
Observation Description: A: Operation as intend no loss of function during test and after test. B: Temporary loss of function or degradation of performance which ceases after the disturbance ceases, and from which the equipment under test recovers its normal performance, without operator intervention						

16. Test Setup Photos

16.1 Conducted emission at the mains ports

[Front]

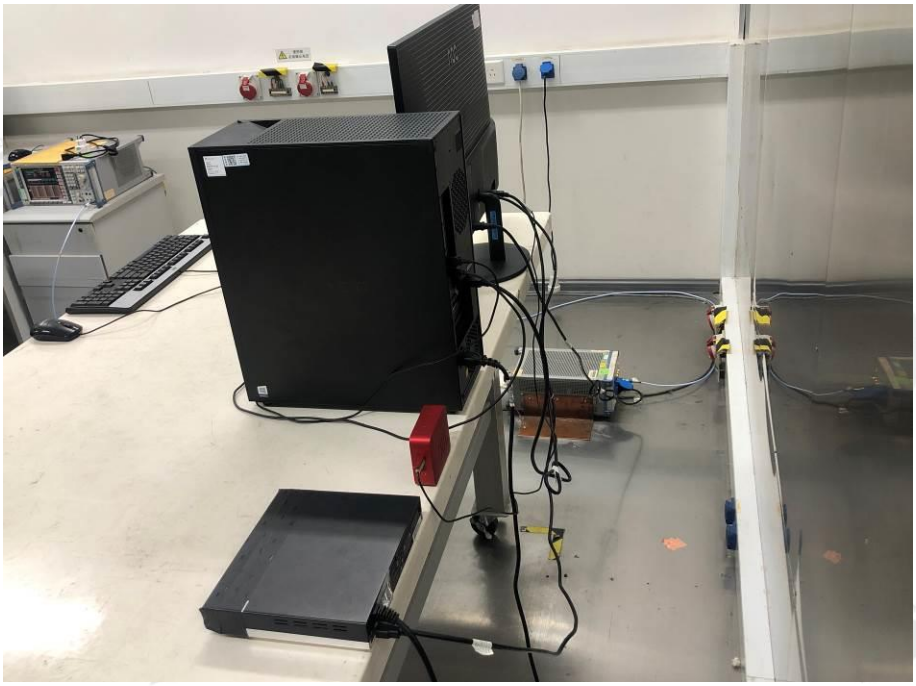

[Rear]

16.2 Radiated emission (Below 1 GHz)

[Front]

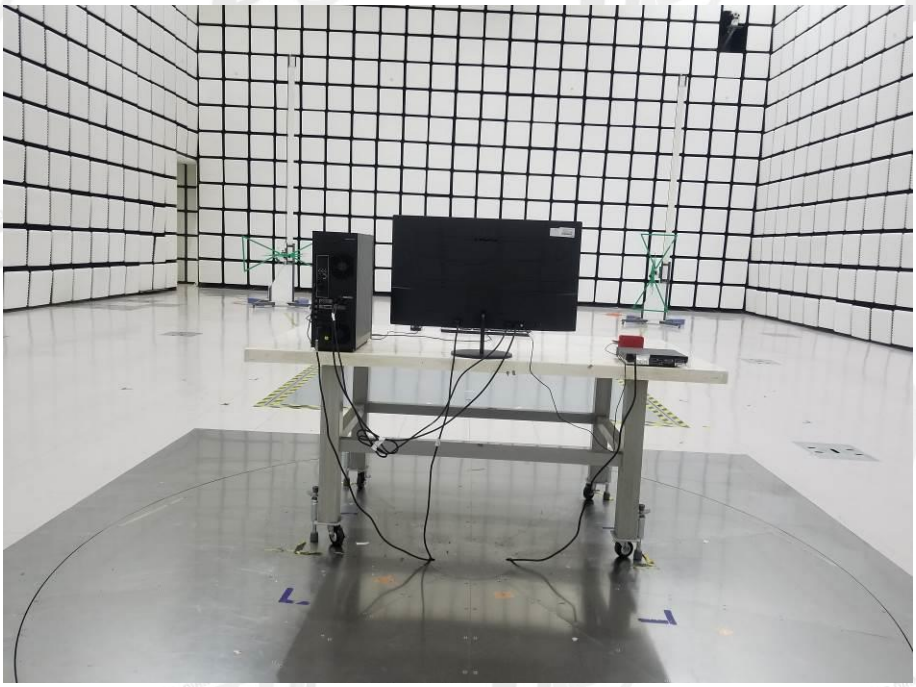

[Rear]

16.3 Radiated emission (Above 1 GHz)

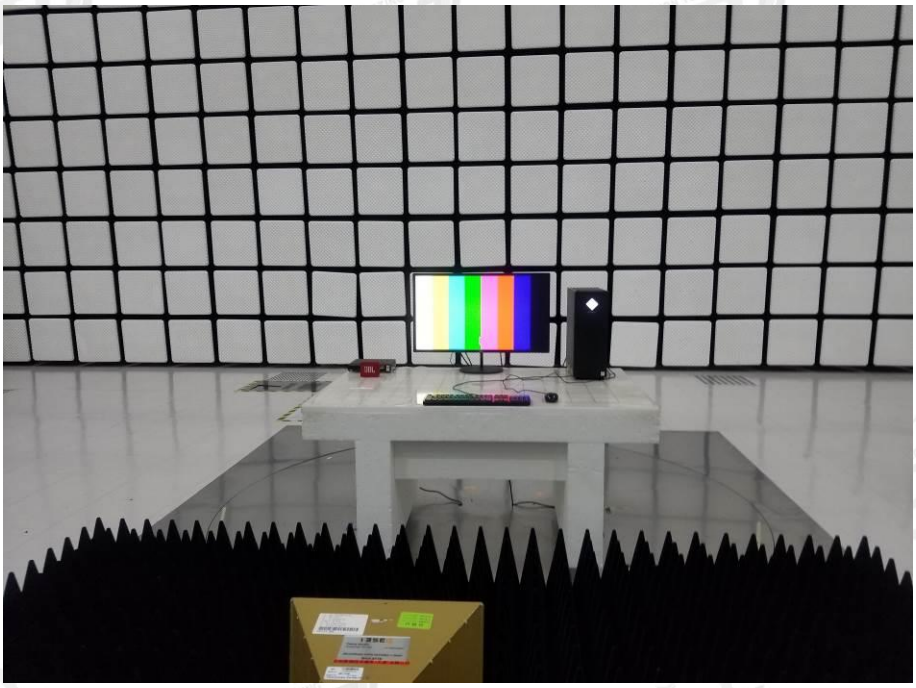

[Front]

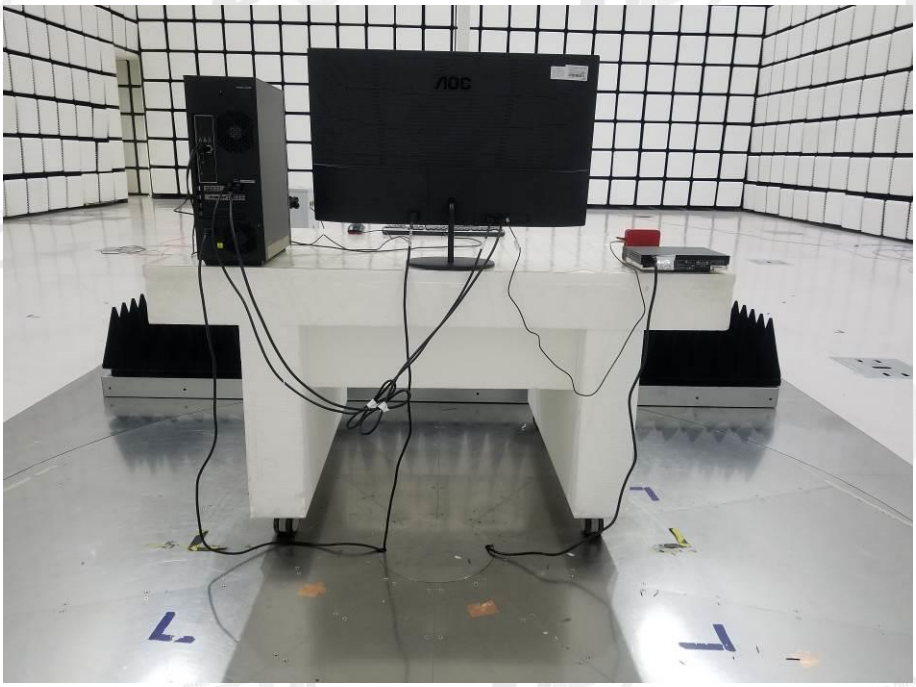

[Rear]

16.4 Harmonic current

16.5 Voltage fluctuation & Flicker

16.6 Electrostatic discharge test

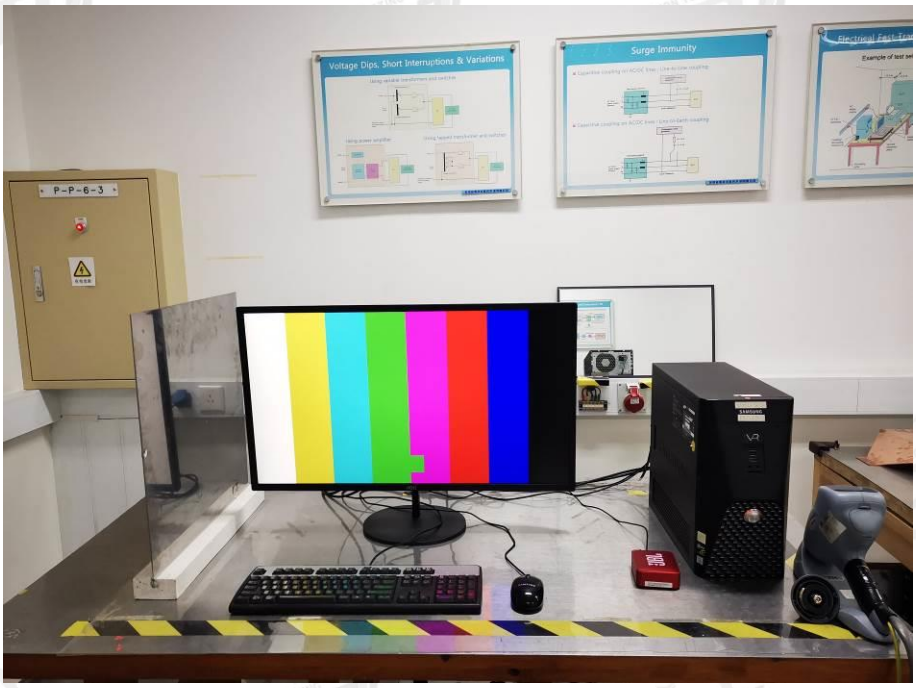

16.7 Continuous Radio Frequency Disturbances

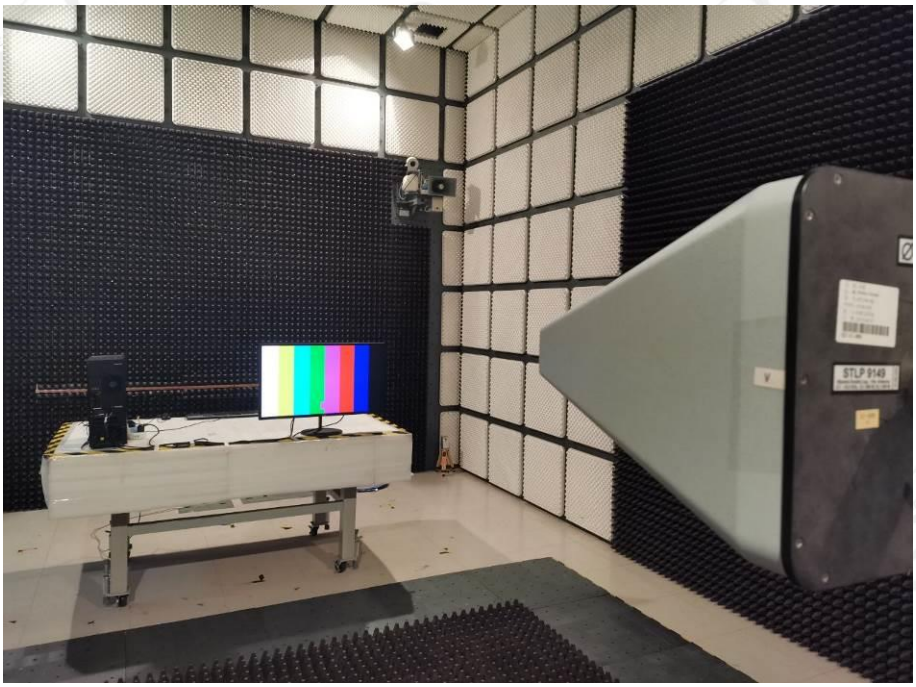

16.8 Electrical fast transients(EFT)

16.9 Surge

16.10 Continuous conducted disturbances

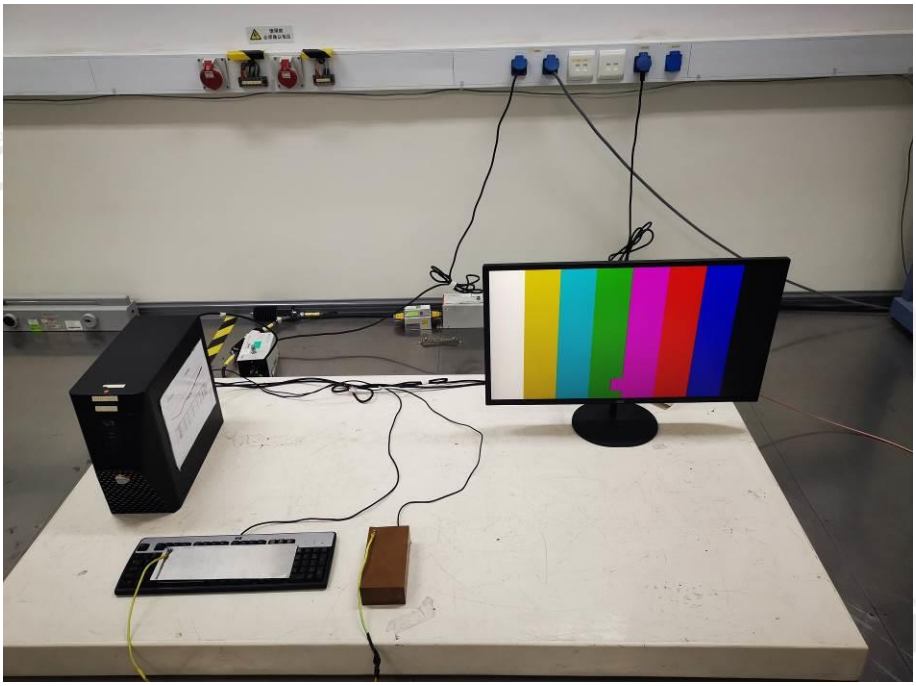

16.11 Power-frequency magnetic fields test

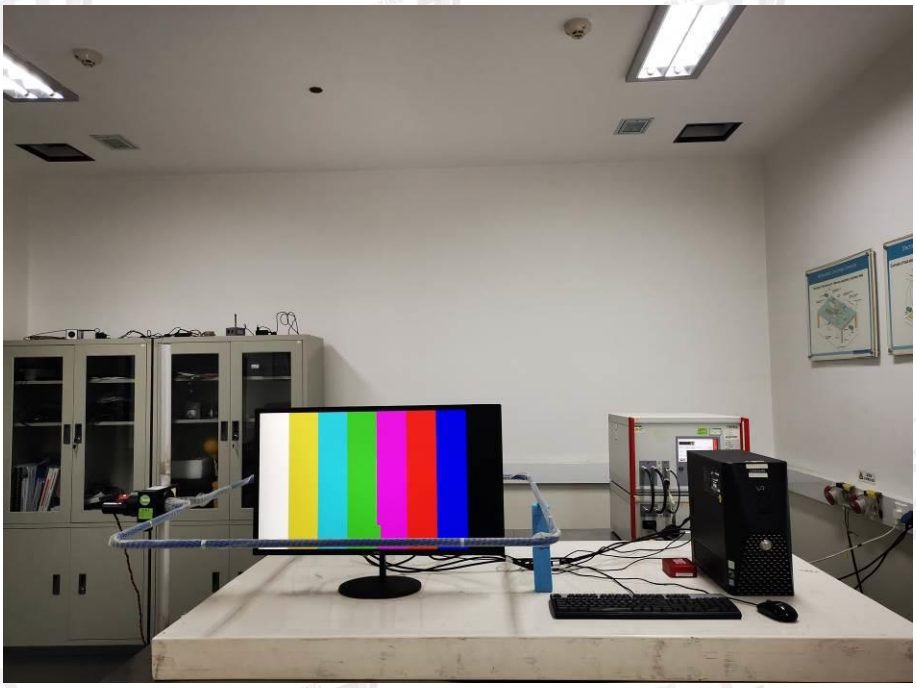

16.12 Voltage dips and interruptions

END OF REPORT